WEIL-McLAIN®

SlimFit®

Series 2

Models 1000 - 2000 MBH

Commercial Condensing

Gas-fired water boilers

Boiler Manual

- Installation
- Maintenance
- Startup
- Parts

WARNING This manual must only be used by a qualified heating installer/service technician. Read all instructions, including this manual and all other information shipped with the boiler, before installing. Perform steps in the order given. Failure to comply could result in severe personal injury, death or substantial property damage.

DO NOT operate the boiler during construction unless combustion air is piped to the boiler air inlet from a dust-free and contaminant-free area. The boiler can be severely damaged by drywall dust or other combustion air contaminants.

Part number 550-100-180/0717

The SlimFit® Commercial Condensing Water Boiler

SlimFit model numbers:

Left-hand boilers (cleanout access on left side when facing burner end)	Right-hand boilers (cleanout access on right side when facing burner end)
SF1000L — 1000 MBH input	**SF1000R** — 1000 MBH input
SF1500L — 1500 MBH input	**SF1500R** — 1500 MBH input
SF2000L — 2000 MBH input	**SF2000R** — 2000 MBH input

1 Cast aluminum sectional heat exchanger

Heat exchanger can be supplied in left-hand or right-hand configuration. They CANNOT be field converted. They must be purchased as left or right.

Left-hand configuration — cleanout access and gas pipe on left side; supply and return pipes on right side.

Right-hand configuration — cleanout access and gas pipe on right side; supply and return pipes on left side.

2 Heat exchanger cleanout plate

3 Blower

Air enters through the air intake adapter, then enters the venturi. The blower pulls air and gas through the venturi and pushes the mixture into the burner. The advanced blower design and air inlet silencer yield very quiet operation.

4 Blower motor

5 Venturi

When air flows through the venturi, it creates a vacuum that is sensed by the gas valve to regulate gas flow.

6 Acoustic adapter (SF1000 only) (not shown)

This adapter includes an acoustic chamber that minimizes combustion noise.

7 Control module (see upper right)

8 Expansion module

The expansion module operates the gas valve, monitors gas pressure switches and provides a dry contact for the boiler circulator (suitable for up to 10 amps). Connections for BMS and Boiler-to-Boiler communications also located on board.

9 Electronic display & buttons

The electronic display is used to configure boiler settings and monitor boiler operation. The buttons allow changing display mode, entering setting values, and resetting after lockout.

10 Automatic gas valve

The automatic gas valve incorporates two solenoid-operated valve seats. The valve senses the vacuum in the venturi (item 5) caused by flowing air. Gas flows in proportion to air flow, so air/fuel ratio remains constant as blower speed/air flow changes.

11 Gas valve reference line

This line is used to measure the pressure of the incoming air to the venturi and adjust the combustion accordingly.

12 Electrical entrance snap-in covers

Knockouts are provided in the jacket top panel, allowing conduit entry above the low-voltage and line-voltage field wiring terminal strips.

13 Gas valve test cock

14 Terminal strips

15 ON/OFF switch

16 Blower relay

17 Transformer

18 Ignition transformer

19 High gas pressure switch

20 Low gas pressure switch

21 Minimum air flow switch

22 Air pressure switch

23 Low water cutoff (not shown)

The low water cutoff is mounted in a tapping in the top corner of the burner end section. (Opposite the igniter electrode side) (built in test button - Reset is done through main control)

24 Premix gas burner (not shown)

Made with high-grade stainless steel and fiber mesh construction, the burner uses pre-mixed gas and air.

25 Ignition electrode and flame sensor (not shown)

The burner flame is ignited by applying a high voltage to the ignition electrode, located in the front section. This causes a spark (from electrode to ground). After ignition, the flame sensor electrode (not shown, located in the rear section) measures flame signal.

26 Flame inspection window

The quartz glass windows provides a view of the burner surface and flame (one located on each boiler end section).

Control overview

- The control can operate a single boiler or coordinate with other **SlimFit 1000-2000 Series 2** boilers in a multiple boiler system.
- Control inputs and outputs allow operation of multiple heating circuits (space heating and DHW, for example).
- Up to three priority levels can be set, providing automatic switch-over on demand.
- This manual provides quick set-up information for single boiler installations.
- The Advanced Manual, also supplied with the boiler, provides instructions for setting up multiple-boiler systems and for using advanced options for single boilers.

Control operation

- The control responds to signals from the room thermostats, DHW aquastats (if used), boiler sensors (boiler return, boiler supply, flue temperature), outdoor temperature and system sensor, if used.
- The control automatically adjusts blower speed (and gas flow rate) to match boiler output to space heating and/or DHW heating demand.
- The default control settings provide for three space heating zones. The control can be easily set up for operation with a DHW zone, with or without domestic priority.

Control *WIZARD*

- The control setup Wizard is available from the BOILER SETTINGS menu that appears during initial startup.
- The Wizard leads through a step-by-step setup procedure designed for the application chosen.
- Context-sensitive help is available to explain the purpose of key setup items.

27 Water outlet pipe (system supply) — 3" flanged

28 Water return pipe (system return) — 3" flanged

29 Gauge tapping

The pressure/temperature gauge is shipped loose for field installation in this tapping.

30 Relief valve tapping

The relief valve is shipped loose for field installation in this tapping.

31 Temperature sensor tapping — outlet temperature (not visible in the view shown)

The outlet sensor tapping is located on top of the outlet pipe, just outside the heat exchanger connection.

32 Temperature sensor tapping — return temperature (not visible in the view shown)

The return sensor tapping is located on top of the return pipe, just outside the heat exchanger connection.

33 Gas connection

34 Vent connection

Vent pipe connection, 10-inch nominal (9.85" I. D.). (Installer must provide a SlimFit Vent/Air Adapter from vent manufacturer's to adapt to the vent pipe used). Where the manual allows vent pipe smaller than the adapter outlet, a reducer must also be provided by the installer.

35 Air intake connection

Air pipe connection, 10-inch nominal (9.85" I. D.). (Installer must provide a SlimFit Vent/Air Adapter from vent manufacturer's to adapt to the air pipe used). Where the manual allows vent pipe smaller than the adapter outlet, a reducer must also be provided by the installer. Leave air connection open for inside air applications (direct exhaust).

36 Condensate trap assembly

37 Burner end access doors

The three access panels on the burner end are interchangeable. This allows location of the display on either the front side or burner end of the boiler.

38 Piping end access doors

The three access panels on the piping end are removable for access and servicing.

39 Electrical access panel

40 Casters (used for locating boiler only)

41 Mounting legs (extended after boiler is in position)

42 Heat exchanger temperature sensor

The SlimFit® Commercial Condensing Water Boiler (Model SF2000 shown)

Configuration options

(Order boiler as left-hand or right-hand)

Left-hand (suffix L)

- Cleanout panel access is on the left side when viewed from the burner end.
- Control display is factory-mounted on front (cleanout access side), but can be field relocated on burner end as instructed in this manual. See page 6 for details.

Right-hand (suffix R)

- Cleanout panel access is on the right side when viewed from the burner end.
- Control display is factory-mounted on front (cleanout access side), but can be field relocated on burner end as instructed in this manual. See page 6 for details.

Electrical panel components

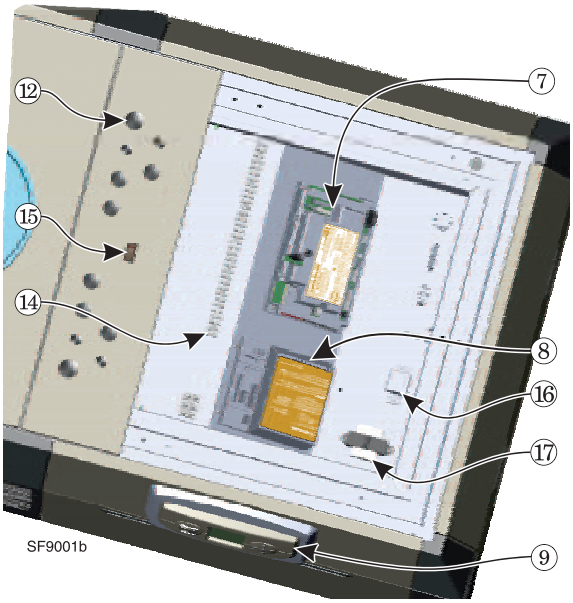

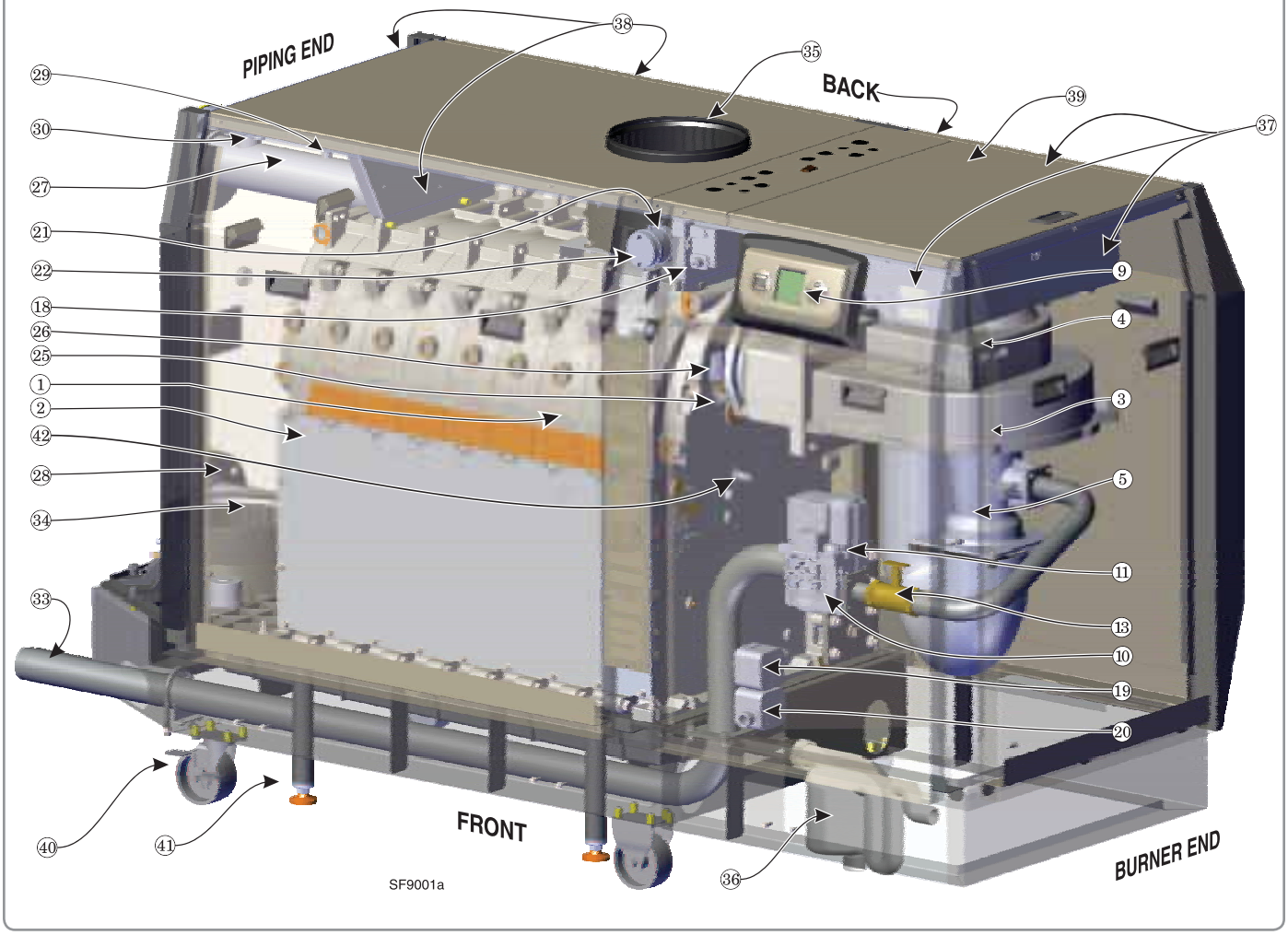

Contents

Contents 4
Hazard definitions 4
Please read before proceeding 5
Prepare boiler location 6
Prepare boiler 10
Install water piping 14
Venting/air piping — Massachusetts installations . 22
Venting/combustion air — general 23
Venting/combustion air — options (Category II & IV) 25
Appliances remaining on an existing vent system . 26
Venting/combustion air — options (Category II) . . 27
DIRECT EXHAUST — Boiler room air openings (Category IV) . .30
DIRECT EXHAUST — Termination location (Category IV) 32
DIRECT EXHAUST — Sidewall (Category IV) . . . 33
DIRECT EXHAUST — Vertical (Category IV) 35
DIRECT VENT — Boiler room air openings 42
DIRECT VENT — Termination location 44
DIRECT VENT — Sidewall 45
DIRECT VENT — Vertical. 47
Install condensate components. 50
Gas piping 51
Gas train diagram 52
Field wiring (see Figure 57 & Figure 58) 53
Zoning with the SlimFit Control 60
Control operation and setup 62

WARNING **DO NOT START THIS BOILER without following all instructions and procedures specified in the following sections:**
"Startup — fill the system" on page 79
"Startup — final checks" on page 81
"Startup procedure" on page 82.

Failure to follow the instructions in this manual could result in severe personal injury, death or substantial property damage.

CONTRACTOR menus. 68
BOILER SETTINGS menu, BASIC mode 69
PRIORITY 1, 2, 3 menus, BASIC mode 70
ASSIGN INPUTS menu, BASIC mode 71
DIAGNOSTIC menu 73
MAINTENANCE, DATE AND TIME menus 78
Startup — fill the system 79
Startup — final checks 81
Startup procedure 82
Annual startup and maintenance schedule 86
Annual startup 87
Troubleshooting 93
Maintenance. 102
Replacement parts 105
Dimensions 114
Ratings — SlimFit Series 2 boilers 116
Installation and Service Certificate 117
Installation and Gas Boiler Data Collection Sheet . 118

Hazard definitions

The following defined terms are used throughout this manual to bring attention to the presence of hazards of various risk levels or to important information concerning the life of the product.

DANGER Indicates presence of hazards that will cause severe personal injury, death or substantial property damage.

CAUTION Indicates presence of hazards that will or can cause minor personal injury or property damage.

WARNING Indicates presence of hazards that can cause severe personal injury, death or substantial property damage.

NOTICE Indicates special instructions on installation, operation or maintenance that are important but not related to personal injury or property damage.

Please read before proceeding

WARNING

Installer— Read all instructions, including this manual and all other information shipped with the boiler, before installing. Perform steps in the order given.

User — This manual is for use only by a qualified heating installer/service technician. Refer to User's Information Manual for your reference.

User — Have this boiler serviced/inspected by a qualified service technician, at least annually.

Failure to comply with the above could result in severe personal injury, death or substantial property damage.

NOTICE

Write in the CP number in the space provided on the Installation certificate on page 117 if not already shown.

When calling or writing about the boiler— Please have the boiler model number from the boiler rating label and the CP number from the boiler jacket.

Consider piping and installation when determining boiler location.

Any claims for damage or shortage in shipment must be filed immediately against the transportation company by the consignee.

DANGER

If any part of a boiler, burner or its controls has been sprayed with or submerged under water, either partially or fully, DO NOT attempt to operate the boiler until the boiler has been either replaced or completely repaired, inspected, and you are sure that the boiler and all components are in good condition and fully reliable.

Otherwise, by operating this boiler, you will cause a fire or explosion hazard, and an electrical shock hazard, leading to serious injury, death, or substantial property damage. See the instructions at right.

Saltwater Damage — The exposure of boiler components to saltwater can have both immediate and long-term effects. While the immediate effects of saltwater damage are similar to those of freshwater (shorting out of electrical components, washing out of critical lubricants, etc.), salt and other contaminants left behind can lead to longer term issues after the water is gone due to the conductive and corrosive nature of the salt residue. Therefore, Weil-McLain equipment contaminated with saltwater or polluted water will no longer be covered under warranty and should be replaced.

Electrical Damage — If any **electrical component** or **wiring** came into contact with water, or was suspected to have come into contact with water, replace the boiler with a new Weil-McLain boiler.

WARNING **Failure to adhere to the guidelines below can result in severe personal injury, death or substantial property damage.**

When servicing boiler —

- To avoid electric shock, disconnect all electrical supplies to the boiler before performing maintenance.
- To avoid severe burns, allow boiler to cool before performing maintenance.
- This boiler contains ceramic fiber and fiberglass materials. Refer to the WARNING and instructions on page 87.

Boiler operation —

- Do not block flow of combustion or ventilation air to boiler.
- Should overheating occur or gas supply fail to shut off, do not turn off or disconnect electrical supply to pump. Instead, shut off the gas supply at a location external to the appliance.

Boiler water —

- The SlimFit heat exchanger is made of aluminum, and requires that system pH always be between 7.0 and 8.5 and water chemistry be checked. **Chemical treatment is required. See page 79 for details.**
- **Thoroughly flush the system** (without boiler connected) to remove sediment. **Install a strainer or other sediment removal equipment** if necessary. The high-efficiency heat exchanger can be damaged by build-up or corrosion due to sediment.
- Do not use petroleum-based cleaning or sealing compounds in boiler system. Gaskets and seals in the system may be damaged. This can result in substantial property damage.
- Continual fresh make-up water will reduce boiler life. Mineral buildup in heat exchanger reduces heat transfer, overheats the aluminum heat exchanger, and causes failure. Addition of oxygen carried in by make-up water can cause internal corrosion. Leaks in boiler or piping must be repaired at once to prevent make-up water. Use this boiler ONLY in a closed-loop system.
- Do not add cold water to a hot boiler. Thermal shock can cause heat exchanger to crack.

Freeze protection fluids —

NEVER use automotive or standard glycol antifreeze, even glycol made for hydronic systems. Use only freeze-protection fluids recommended in this manual (see page 79). Follow all guidelines given. Thoroughly clean and flush any replacement boiler system that has used glycol before installing the new SlimFit boiler.

CAUTION **Frozen Water Damage Hazard**

Residences or buildings that are unattended in severely cold weather, boiler system components failures, power outages, or other electrical system failures could result in frozen plumbing and water damage in a matter of hours. For your protection, take preventative actions such as having a security system installed that operates during power outages, senses low temperature, and initiates an effective action. Consult with your boiler contractor or a home security agency.

Commonwealth of Massachusetts

When the boiler is installed within the Commonwealth of Massachusetts:

- This product must be installed by a licensed plumber or gas fitter.
- If antifreeze is used, a reduced pressure back-flow preventer device shall be used.
- Sidewall vent air installations — see instruction on page 22.

Prepare boiler location

Installations must comply with:

- Local, state, provincial, and national codes, laws, regulations and ordinances.
- National Fuel Gas Code - ANSI Z223.1/NFPA54 – latest edition.
- Standard for Controls and Safety Devices for Automatically Fired Boilers, ASME CSD-1, when required.
- National Electrical Code.
- For Canada only: Natural Gas and Propane Installation Code - CAN/CSA B149.1 Installation Code, CSA C22.1 Canadian Electrical Code Part 1 and any local codes.
- Where required by the authority having jurisdiction, the installation must conform to the Standard for Controls and Safety Devices for Automatically Fired Boilers, ANSI/ASME CSD1.

NOTICE The SlimFit boiler gas manifold and controls met safe lighting and other performance criteria when boiler underwent tests specified in ANSI Z21.13 — latest edition.

Before locating the boiler, check:

1. Check for nearby connection to:
   - System water piping
   - Venting connections
   - Gas supply piping
   - Electrical power
   - Location of drain for condensate
2. Check area around boiler. Remove any combustible materials, gasoline and other flammable liquids.

WARNING Failure to keep boiler area clear and free of combustible materials, gasoline and other flammable liquids and vapors can result in severe personal injury, death or substantial property damage.

3. The SlimFit boiler must be installed so that gas control system components are protected from dripping or spraying water or rain during operation or service.
4. If new boiler will replace existing boiler, check for and correct system problems, such as:
   - System leaks causing oxygen corrosion or heat exchanger cracks from hard water deposits.
   - Incorrectly-sized expansion tank.
   - Lack of freeze protection in boiler water causing system and boiler to freeze and leak.

Flooring and foundation

Flooring

5. The SlimFit boiler is approved for installation on combustible flooring, but must never be installed on carpeting.

WARNING Do not install boiler on carpeting even if foundation is used. Fire can result, causing severe personal injury, death or substantial property damage.

Foundation

1. The boiler mounting surface must be level and suitable for the load.
2. Provide a solid foundation pad, at least 2 inches above the floor, if any of the following is true:
   - floor can become flooded.
   - the floor is dirt, sand, gravel or other loose material.
   - the boiler mounting area is severely uneven or sloped.
3. The minimum foundation size is listed in Figure 1.
4. Foundation may be of wood, brick or concrete (minimum 2 inches thick) construction.
5. If flooding is possible, elevate boiler sufficiently to prevent water from reaching boiler.

Figure 1 Minimum foundation size

Boiler model	Minimum size (inches)
SF1000	33 × 75
SF1500	33 × 75
SF2000	33 × 87

Garage installation

Precautions

1. Take the following special precautions when installing the boiler in a garage. If the boiler is located in a garage:
   - Mount the boiler at a height above the floor as specified in the National Fuel Gas Code - ANSI Z223.1/NFPA54 – latest edition for U. S. installations, or Natural Gas and Propane Installation Code - CAN/CSA B149.1 for Canadian installations.
   - Locate or protect the boiler so it cannot be damaged by a moving vehicle.
   - Ensure that the installation complies with all applicable codes.

Relocate Control Display, if desired:

NOTICE Do not move the control display panel with the control display communication cable connected. This could damage or completely disable the boiler.

1. Remove lower portion of door panel beneath the control display by pulling outward 3 inches on panel door handles. The panel should rotate on bottom tabs. Then pull upward on panel door handles to remove the panel from the boiler.
2. Reach behind the upper portion of the control display panel and disconnect the RJ45 cable by pressing down on the phone jack style tab, then pull the cable out of the display control board.
3. Use Phillips screwdriver to remove the two (2) screws from the bottom two corners of the upper portion of the control display panel, paying special attention that the control display communication cable is not being pulled with the panel.
4. Remove either of the other two burner end panels that is the intended new location for the control display by lifting upwards on the panel door handles.
5. Insert the upper portion of the control display panel downward on the top frame in the new intended location of the control display. Use a Phillips screwdriver to re-connect the panel to the side and/or corner posts.
6. Move the plastic clip that supports the control display communications cable to a 0.25" hole closest to the new intended location of the control display.
7. Re-insert the phone-jack-style connector back into the control display board.
8. Replace the lower portion of the door panel beneath the control display by inserting the three (3) tabs into the lower frame and then rotating it towards the boiler until the latches snap into place.
9. Replace the non-control display door panel by aligning the three tabs with the lower frame and sliding the door panel downward onto both the top and lower boiler frames.

Prepare boiler location *(continued)*

Clearance requirements

Clearances from combustible materials

1. Hot water pipes — at least ½" from combustible materials.
2. Vent pipe — at least 3⁄16" from combustible materials.
3. See Figure 2 for other clearance minimums.

Clearances for service access

1. See Figure 2 for recommended service clearances. If you do not provide minimum clearances shown, it might not be possible to service the boiler without removing it from the space.

⚠WARNING Openings in floors, walls, ceilings or roofs must be designed for fire stopping as required by local codes. Vent pipe openings through combustible materials must be ⅜" larger in diameter than the vent pipe. Air pipe openings should be ⅜" larger in diameter than the pipe or as required by the pipe manufacturer.

Air openings

⚠WARNING Provide air openings for combustion air and/or ventilation of the room as specified in this manual and as required by applicable codes.

Figure 2 Clearances for LEFT-HAND boilers

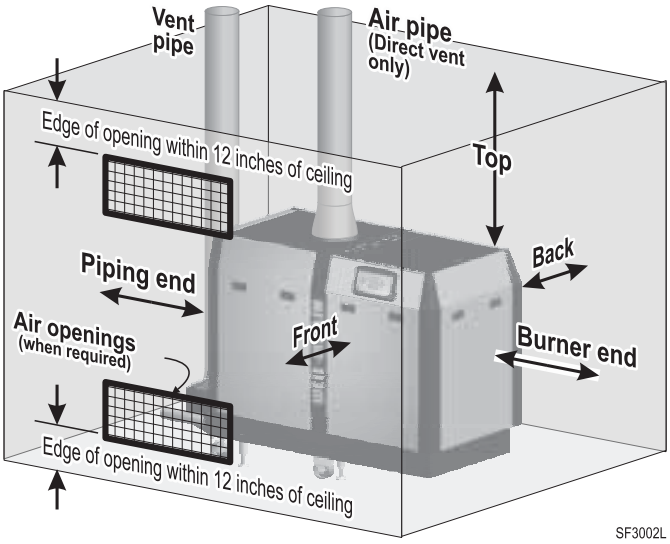

Clearance from:	Minimum clearance to combustible surfaces (inches)	Minimum service access clearances (inches)
Front (cleanout side)	0	36
Back	0	0
Burner end	0	24
Piping end	0	12
Top	4	18
Floor	0	—
Vent pipe	3⁄16	—
Hot water pipes	½	—

Figure 3 Clearances for RIGHT-HAND boilers

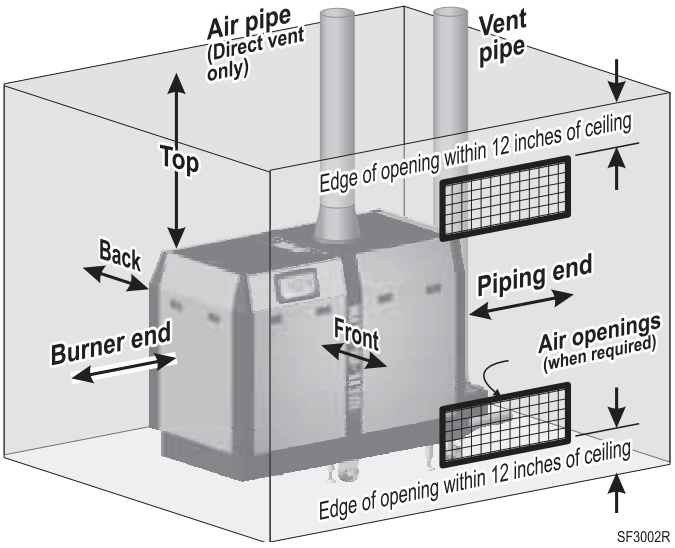

Clearance from:	Minimum clearance to combustible surfaces (inches)	Minimum service access clearances (inches)
Front (cleanout side)	0	36
Back	0	0
Burner end	0	24
Piping end	0	12
Top	4	18
Floor	0	—
Vent pipe	3⁄16	—
Hot water pipes	½	—

Prepare boiler location *(continued)*

NOTICE Verify that boiler placement and clearances comply with all applicable codes.

Placing multiple boilers

1. Locate multiple boilers in boiler room to provide the clearances shown in:
   a. Figure 4 (side-to-side), or
   b. Figure 6 (mirror-image mounting).
   c. Other layouts can be used if all required clearances are maintained.
2. Provide indicated clearances around boilers for access and servicing. If recommended dimensions are not possible, provide at least the minimum clearances given on page 7. Also follow local codes.
3. Construct boiler foundation if boiler room floor is uneven or if there is a danger of flooding. Size foundation to allow for clearance and spacing dimensions shown in either Figure 4 or Figure 6.
4. Chalk-line boiler locations on foundation or boiler room floor.
5. Uncrate, assemble and mount boilers according to instructions in this manual.
6. Provide clearance for installation of venting, air piping, gas piping, condensate piping and components, expansion tank, boiler pump and other accessories.

Figure 4 Side-to-side mounting of multiple SlimFit boilers — LEFT-HAND boilers only

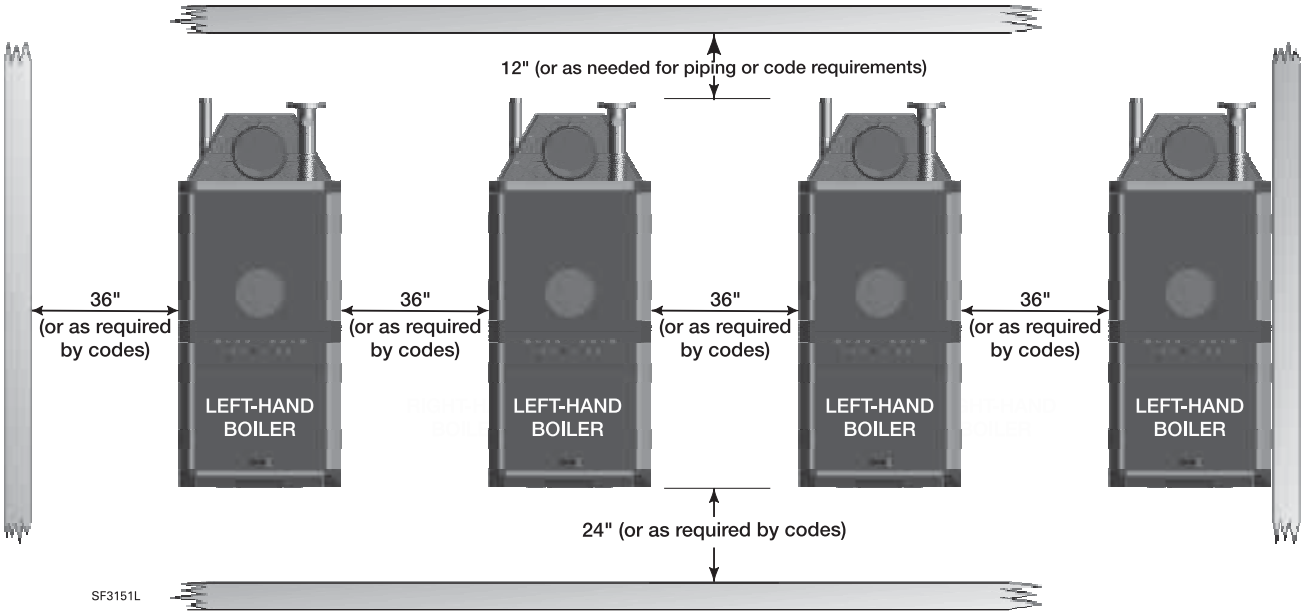

Figure 5 Side-to-side mounting of multiple SlimFit boilers — RIGHT-HAND boilers only

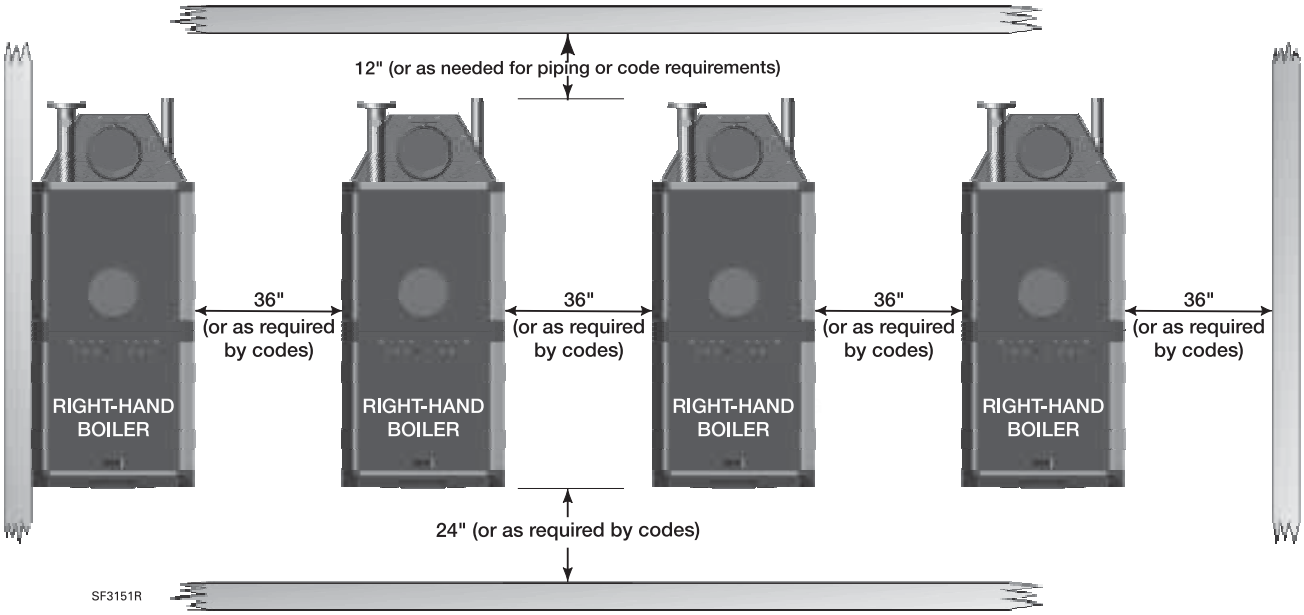

Prepare boiler location *(continued)*

NOTICE Verify that boiler placement and clearances comply with all applicable codes.

Figure 6 Side-by-side installation of multiple SlimFit boilers (using left-hand and right-hand boilers together)

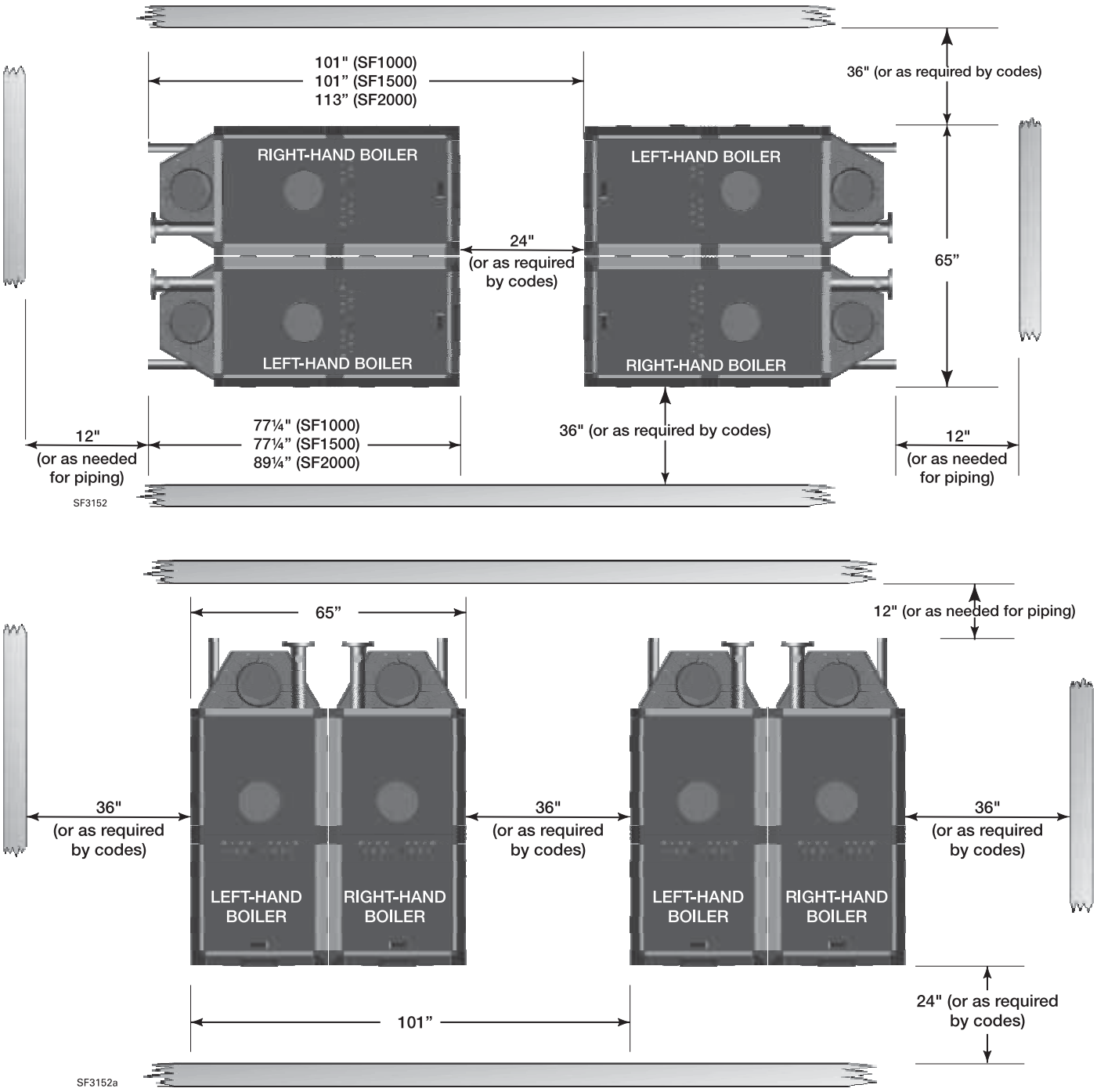

Prepare boiler

Provide air openings to room

Air openings — General

Follow the National Fuel Gas Code - ANSI Z223.1/NFPA54 – latest edition (U.S.) or Natural Gas and Propane Installation Code - CAN/CSA B149.1 (Canada) and all applicable codes to size/verify size of the combustion/ventilation air openings into the space. See the venting instructions section of this manual for required air openings and sizing for either direct vent or direct exhaust installation.

Air openings — SlimFit boiler alone in boiler room

1. **DIRECT VENT —** For direct vent installations (air piped to boiler), no air ventilation openings into boiler room are needed if clearances around the SlimFit boiler are at least equal to the SERVICE clearances shown in Figure 2, page 7. For spaces that DO NOT supply the minimum service access clearances, see the direct vent venting instructions in this manual for required openings.
2. **DIRECT EXHAUST —** For direct exhaust installations (combustion air from inside), provide air openings as specified in the direct exhaust venting section of this manual.

Air openings — SlimFit boiler in same room with other gas or oil-fired appliances

1. **DIRECT VENT —** For direct vent installations (combustion air piped to boiler), size openings only on the basis of the other appliances in the space. No additional air opening free area is needed for the SlimFit boiler because it takes its combustion air from outside.

WARNING For direct vent installations, when the SlimFit boiler is located in the same room as other appliances, provide combustion air openings correctly sized for all appliances in the room except the SlimFit boiler.

Failure to comply with the above warnings could result in severe personal injury, death or substantial property damage.

2. **DIRECT EXHAUST —** For direct exhaust installations, combustion air openings into the room must be sized to handle the SlimFit boiler and all other appliances. See the direct exhaust venting instructions in this manual for required openings.

WARNING **Direct exhaust installations** — On direct exhaust installations, the boiler draws combustion air from the boiler room. If other appliances are installed in the same room, provide combustion air openings correctly sized for **ALL** appliances, including the SlimFit boiler.

Failure to comply with the above warnings could result in severe personal injury, death or substantial property damage.

Vent and air piping requirements *(page 22)*

1. The SlimFit boiler requires a special vent system, designed for pressurized venting.
   a. SlimFit boilers are rated ANSI Z21.13 Category IV (pressurized vent, likely to condense in the vent).
   b. SlimFit commercial boilers can be either:
   Direct-exhaust — vent to the outside, combustion air from inside or . . .
   Direct-vent — both vent and air piped outside.
   c. See instructions beginning on page 22 for vent/air configuration options and installation requirements.
2. Note "Prevention of combustion air contamination" on page 24 when considering vent/air terminations and boiler room conditions when using inside air (direct exhaust installation).
3. Be sure to locate the boiler such that the vent and air piping can be routed through the building and properly terminated. The vent/air piping lengths, routing and termination method must all comply with the methods and limits in instructions beginning on page 29.

Prepare boiler *(continued)*

CAUTION **Cold weather handling** — If boiler has been stored in a very cold location (below 32°F) before installation, handle with care until the plastic components come to room temperature.

WARNING **The boiler is heavy**. Use caution not to drop the boiler or cause bodily injury while lifting and handling.

WARNING **Boiler supply, return and gas pipes** — Do not lift or handle the boiler by the water or gas pipes. Do not push on or apply weight to the pipes. Severe damage can be done to the boiler.

CAUTION Leave the **plastic covers** on the supply and return flanges and on the boiler vent and air adapters until ready to attach piping. This will protect the flanges surfaces from damage and prevent debris from falling into the vent or air adapter.

Uncrating the boiler

WARNING Do not drop the boiler. Damage to boiler components can result. Leave the boiler on the crate pallet until ready to place in final location. Follow all uncrating instructions.

Failure to comply could result in severe personal injury, death or substantial property damage.

1. See Figure 7 for the following.
2. Move the crate to a solid, level surface.
3. There must be room at the piping end to place the ramp and roll the boiler down off the crate pallet.
4. Make sure the crate is sitting securely.
5. Remove outer cardboard covering.
6. Remove the ramp from the crate and place the end of the ramp into the notch in the pallet as shown in Figure 7.
7. Follow the uncrating instruction label to secure the ramp to the pallet.
8. Remove the sheet metal screws and lag bolts from the six shipping brackets. Remove and discard the shipping brackets. Re-insert the upper screws into the holes in the boiler frame for best appearance.

Moving/handling the boiler

WARNING **When moving the boiler, apply pressure ONLY at the jacket corner posts**.

DO NOT use the piping or other extensions to manipulate the boiler.

Failure to comply could damage the boiler heat exchanger or other components.

Figure 7 SlimFit boiler on pallet, with ramp in position

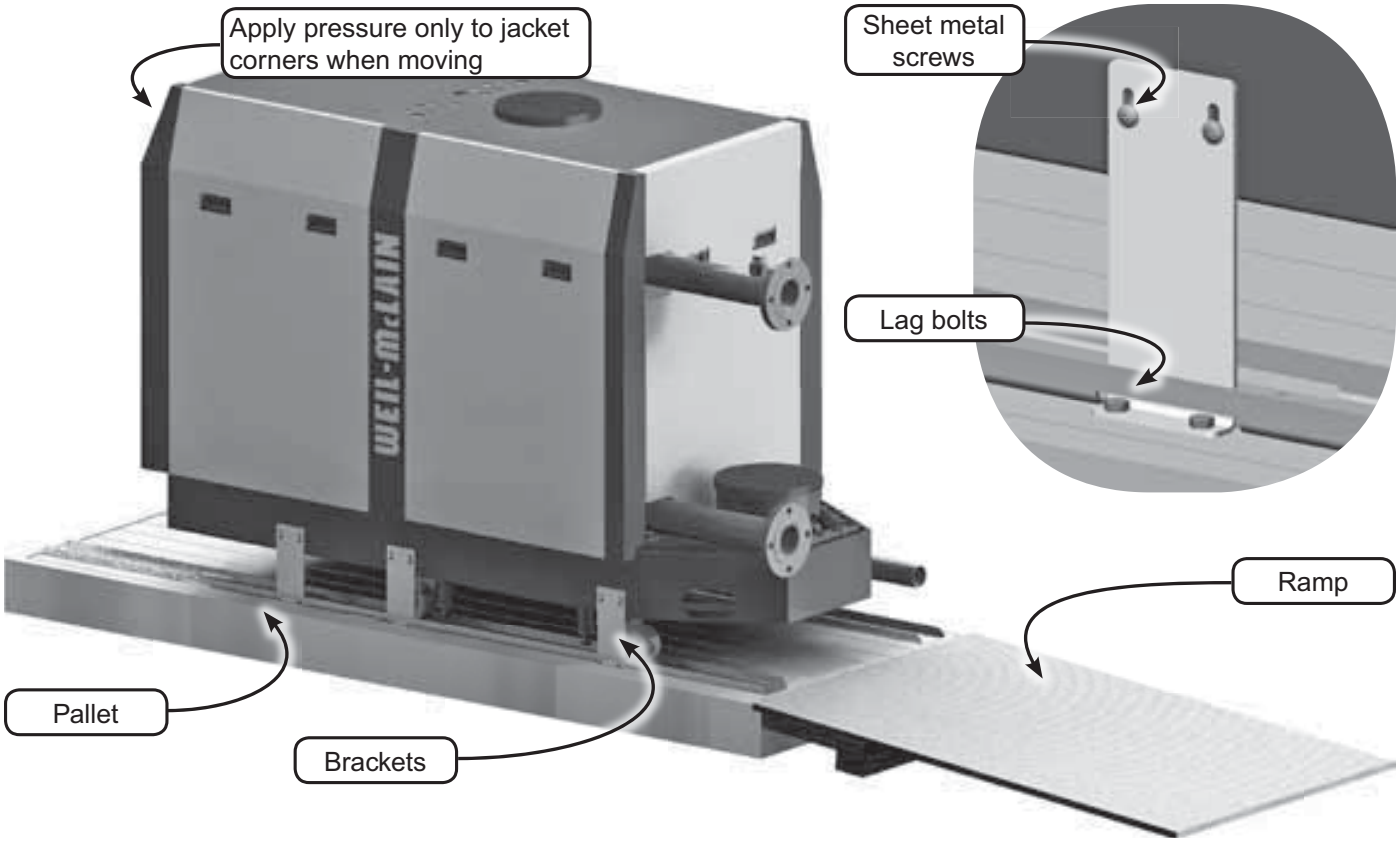

Prepare boiler *(continued)*

Placing the boiler

1. Roll the boiler down the ramp and move the boiler into position. Use only the jacket corner posts to manipulate the boiler.
2. The piping end casters are swivel type. The burner end casters are fixed.
3. Adjust the leveling legs down until they are firmly in contact with the floor.
4. Continue adjusting the legs down until all the bottom of the boiler base is 5¼ inches above the floor.

⚠WARNING

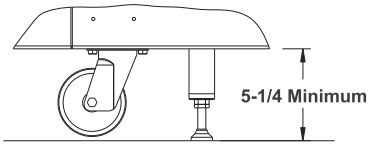

Installation is NOT complete until the leveling legs are lowered below the wheels. The wheels MUST be lifted off of the ground. The minimum distance from the bottom of the frame to the floor must be no less than 5-1/4.

5. Check level. Extend mounting legs further as needed until the boiler is level.

⚠CAUTION The boiler should not be allowed to rest on the casters. These are intended for moving the boiler into position only. The support legs must be extended to take the load of the boiler.

Bolting the boiler to mounting blocks

1. For applications requiring that the boiler be bolted down (such as earthquake zone requirements), remove the casters and bolt the boiler base to mounting blocks using the existing holes in the base.
2. See Figure 8 for details.

⚠CAUTION The mounting blocks must position the boiler with at least 5¼ inches between the bottom of the boiler base and the floor.

⚠WARNING Follow all applicable codes and recognized engineering design practices to verify that the final mounting will meet all seismic, structural and other requirements.

Boiler relief valve and P/T gauge

⚠WARNING **DO NOT install a relief valve with a pressure higher than 100 PSIG**. This is the maximum allowable relief valve setting for the SlimFit boiler. The boiler is shipped with a 30 PSIG relief valve. See Replacement parts in the back of this manual for alternate pressure setting relief valves.

NOTICE The boiler is shipped with a ¼" NPT pressure and temperature gauge which has a pressure range up to 75 psig. This gauge meets ASME requirements up to a relief valve setting of 50 psig. For higher pressure rated relief valves, a different pressure and temperature gauge with a higher pressure range is required. When installing a gauge that requires a larger tapping than the ¼" NPT tapping in the boiler supply manifold, provide an additional tapping in the near boiler piping BEFORE any isolation valve.

Figure 8 Removing the casters to allow bolting the boiler to mounting blocks

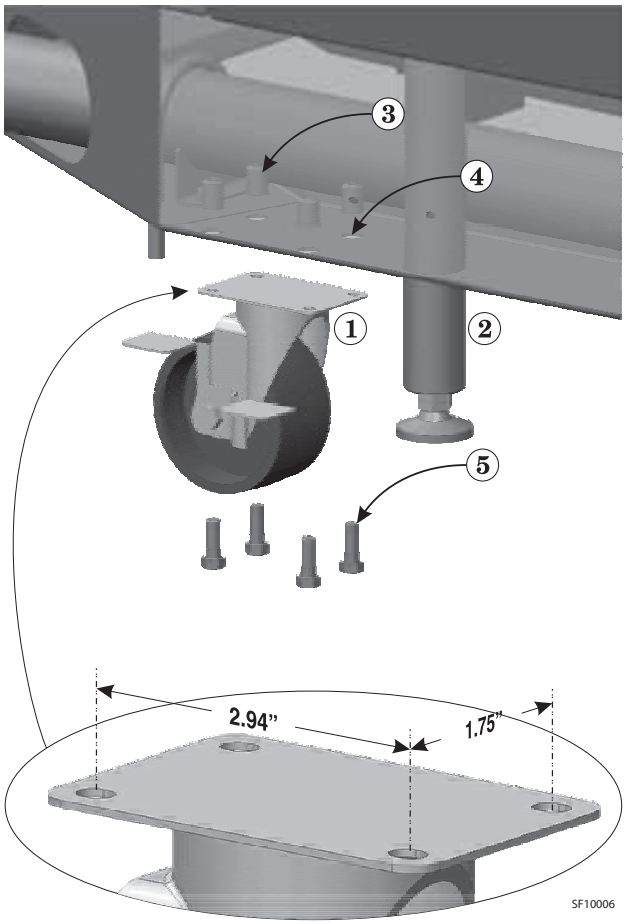

Perform hydrostatic pressure test

Pressure test boiler before permanently attaching water or gas piping or electrical supply.

NOTICE Weil-McLain hydrostatically pressure tests each SlimFit boiler in the factory to 1½ times maximum allowable working pressure per ASME Section IV requirements.

A pressure test should be performed on site to 1½ times the pressure setting of the relief valve to be installed on the unit (45 psig for a 30-psig relief valve; 75 psig for a 50-psig relief valve; or 150 psig for a 100-psig relief valve).

Prepare boiler for pressure test

1. See Figure 9, page 13 for reference in following steps. Use pipe dope sparingly.
2. At the boiler supply and return flanges, temporarily attach a 3-inch ANSI blind flange with tapping for a nipple and valve as shown (flanges, valves, gaskets nipples supplied by installer).

Prepare boiler *(continued)*

3. Attach a water supply and hand pump to the lower valves.
4. Attach a drain line to the upper valve.
5. Remove the pressure & temperature gauge from the trim box shipped with the boiler.
6. Remove the factory-installed plug from the ½-inch tapping on top of the boiler supply pipe.
7. Apply pipe dope to the P/T gauge and install in the ¼" tapping as shown.

Fill boiler and pressure test

1. Open the shutoff valves installed on the supply and return connections.
2. Allow water to flow into the bottom connection and air to flow out the top connection.
3. When water reaches the shutoff valve on top, allow water to flow long enough to ensure all air is out of the heat exchanger. Then close the upper shutoff valve.
4. Close off the water supply and use the hand pump to raise the water pressure for testing.
5. The test pressure should be 1½ times the pressure setting of the relief valve to be installed on the boiler (45 psig for a 30-psig relief valve; 75 psig for a 50-psig relief valve; or 150 psig for a 100-psig relief valve).

⚠WARNING The test pressure MUST NOT exceed the maximum pressure on the P/T gauge. If test pressure will be higher than the maximum range of the P/T gauge, use a different gauge for the test.

6. Gradually apply pressure until test pressure is reached. Then close off the shutoff valve.
7. Hold at test pressure for 10 minutes.

⚠WARNING Do not leave boiler unattended. A cold water fill could expand and cause excessive pressure, resulting in severe personal injury, death or substantial property damage.

8. Make sure that constant gauge pressure has been maintained throughout test.
9. Check for leaks. Repair if found.

⚠WARNING **Leaks must be repaired at once.** Failure to do so can damage boiler, resulting in substantial property damage.

⚠WARNING **Do not use petroleum-based** cleaning or sealing compounds in boiler system. Gaskets and seals in the system may be damaged. This can result in substantial property damage.

Drain and remove fittings

1. Disconnect fill water hose from water source.
2. Open upper shutoff valve.
3. Drain boiler through lower shut-off valve.
4. Remove hose or drain piping after draining.
5. Remove the blanking flange/valve assemblies from the boiler supply and return flanges.
6. See page 14 to install relief valve in the 1¼" tapping on top of the boiler outlet pipe.

Figure 9 Hydrostatic test piping connections — flanges, valves and gaskets provided by installer

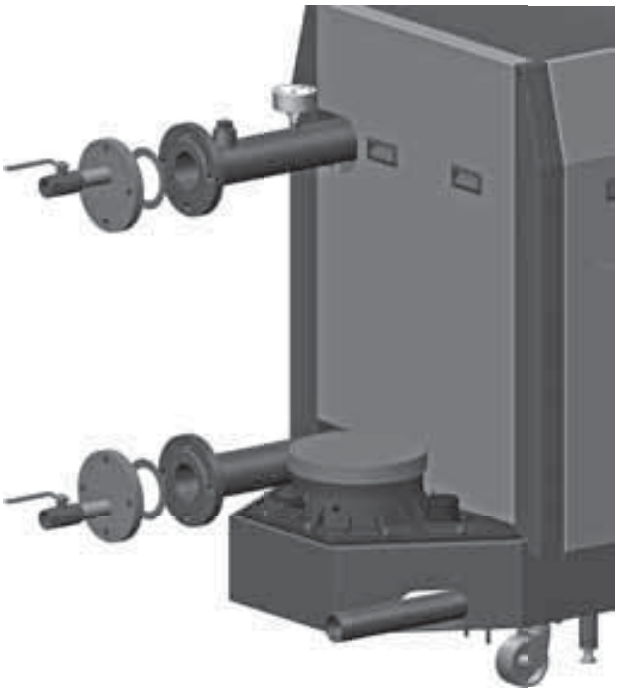

Boiler drain valve *(provided by installer)*

1. If not installing a drain valve off of the return piping, install a ¾-inch boiler drain valve in the ¾-inch tapping at the lower right burner end of the heat exchanger (see Figure 10).

Figure 10 Boiler drain valve tapping – optional location for drain valve

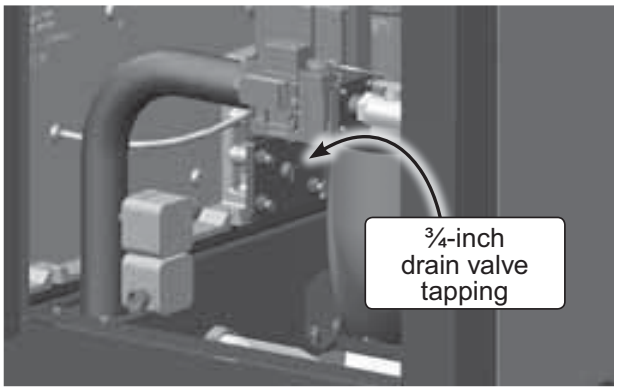

Install water piping

WARNING Use two wrenches when tightening water piping at boiler, using one of the wrenches to prevent the boiler interior piping from turning. Failure to support the boiler piping connections to prevent them from turning could cause damage to boiler components.

General piping information

Additional controls, when required

NOTICE The control module uses temperature sensors to provide both high limit protection and modulating temperature control, and is UL353 Limit Controls certified to meet ASME CSD-1 and Section IV requirements. The boiler is equipped with a low water cut-off and the manual reset is performed through the control module. Some codes/jurisdictions may require additional external controls.

Additional limit controls

1. Consult local requirements for other codes/standards to determine if additional limit devices are needed.

WARNING **Multi-temperature systems** — If the heating system includes circuits that require lower temperature water (radiant slab circuits, for example) as well as higher temperature circuits, it is recommended to protect low-temperature circuits with limit controls that are wired to a manual or automatic reset circuit on the control.

2. See instructions beginning on page 47 for wiring information.
   a. The control provides two (2) sets of limit control contacts — one set will cause automatic reset and the other will cause manual reset of the control.
   b. The control can be reset using the manual RESET function on the control display.

Low water cutoff

1. A push-to-test low water cutoff is factory-installed in the boiler. The low water cutoff probe is mounted on the front of the boiler heat exchanger.
2. The low water cutoff is manual reset through the main control. This can be performed through the display by selecting MANUAL RESET.

Pressure/temperature gauge

1. Mount the pressure/temperature gauge (shipped loose with the boiler) in the ¼-inch tapping on top of the boiler supply outlet pipe.

NOTICE The boiler is shipped with a ¼" NPT pressure and temperature gauge which has a pressure range up to 75 psig. This gauge meets ASME requirements up to a relief valve setting of 50 psig. For higher pressure rated relief valves, a different pressure and temperature gauge with a higher pressure range is required. When installing a gauge that requires a larger tapping than the ¼" NPT tapping in the boiler supply manifold, provide an additional tapping in the near boiler piping BEFORE any isolation valve.

Backflow preventer

1. Use backflow check valve in cold water supply as required by local codes.

Install relief valve

1. Install relief valve (shipped loose with the boiler) in the 1¼-inch tapping on top of the boiler supply outlet pipe.
2. Connect discharge piping to safe disposal location, following guidelines in the **WARNING** below.

Installing relief valve

WARNING **DO NOT install a relief valve with a pressure higher than 100 PSIG**. This is the maximum allowable relief valve setting for the SlimFit boiler. The boiler is shipped with a 30 PSIG relief valve. See Replacement parts in the back of this manual for alternate pressure setting relief valves.

To avoid water damage or scalding due to relief valve operation, as per local or state codes:

Discharge line must be connected to relief valve outlet and run to a safe place of disposal. Terminate the discharge line in a manner that will prevent possibility of severe burns or property damage should the valve discharge.

Discharge line must be as short as possible and be the same size as the valve discharge connection throughout its entire length.

Discharge line must pitch downward from the valve and terminate at least 6" above the floor drain where any discharge will be clearly visible.

The discharge line shall terminate plain, not threaded, with a material serviceable for temperatures of 375 °F or greater.

Do not pipe the discharge to any place where freezing could occur.

No shutoff valve shall be installed between the relief valve and boiler, or in the discharge line. Do not plug or place any obstruction in the discharge line.

Test the operation of the valve after filling and pressurizing system by lifting the lever. Make sure the valve discharges freely. If the valve fails to operate correctly, replace it with a new relief valve.

Failure to comply with the above guidelines could result in failure of the relief valve to operate, resulting in the possibility of severe personal injury, death or substantial property damage.

Install water piping *(continued)*

Recommended pipe sizing

Size the piping and the pumps to provide the required temperature rise. See Figure 11 for boiler head loss curves. See Figure 13 for maximum and minimum flow rate through the boiler as well as head loss vs flow rate.

Size system piping following Figure 12 or apply recognized engineering practices to size the piping.

WARNING **DO NOT design the piping and components for a boiler flow rate above or below** the range given in Figure 13. Insufficient flow will cause nuisance outages due to limit operation. Excessive flow can damage the boiler heat exchanger from erosion.

For applications requiring system flow rates higher or lower than those allowed in Figure 13, use ONLY primary/secondary piping. Size the boiler pump for the proper flow rate.

CAUTION **NOTE 1:** Use at least 3-inch schedule 40 pipe on all boiler loop piping (connecting boiler to and from the primary/secondary connection, item 21). Pipe sizing is based on a temperature rise of 30°F, corresponding to the recommended maximum flow rate. Failure to follow these guidelines could result in system problems.

Figure 11 Boiler head loss vs flow rate for SlimFit boilers

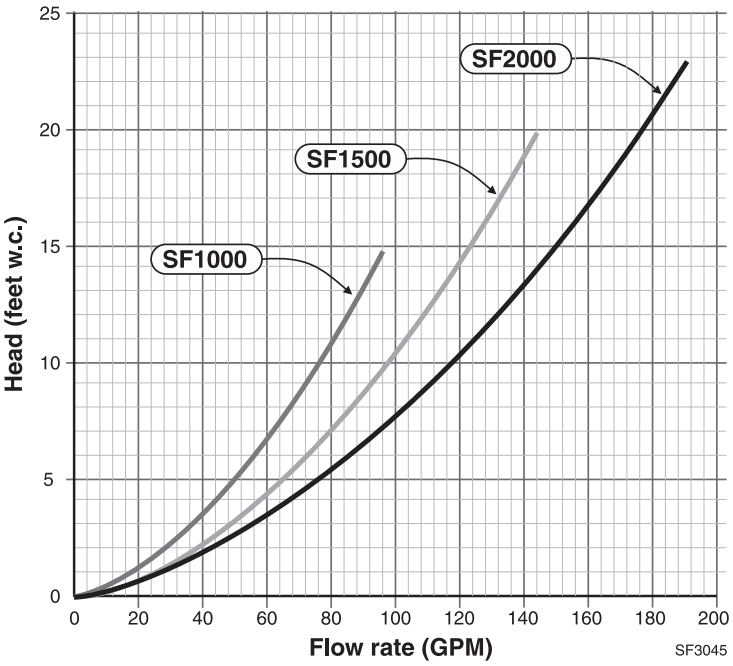

Figure 12 Recommended pipe sizing vs flow rate

Sch 40 Pipe Diameter	Maximum Flow rate GPM	Sch 40 Pipe Diameter	Maximum Flow rate GPM
2	45	6	800
3	140	8	1650
4	290	10	3000
5	500	12	4750

NOTICE For pipe sizes other than 3 inch, provide reducers to adapt from external piping to the boiler 3-inch supply and return flanged connections.

WARNING **DO NOT** design for flow rates above or below the range listed in Figure 13. The boiler and system components can be damaged by excessive or insufficient flow. Temperature rises shown below apply to water only. For glycol/water applications, the temperature rise will be different, but the flow rate must be maintained within the range listed below.

Figure 13 Flow rate and pressure drop data for Slim-Fit boilers **AT FULL INPUT**

SF1000		
GPM	Temperature Rise (°F)	Boiler head loss (Feet w.c.)
43	44.5	4.1
50	38.3	5.1
**** 63**	**30.4**	**7.4**
70	27.4	8.7
80	24.0	10.9
90	21.3	13.3
96	20.0	14.8
** Suggested design flow rate (30°F temp. rise, water only)		

SF1500		
GPM	Temp. Rise °F	Boiler head loss Feet w.c.
64	44.9	4.8
75	38.3	6.3
**** 96**	**29.9**	**9.7**
105	27.4	11.3
120	24.0	14.3
135	21.3	17.7
144	20.0	19.9
** Suggested design flow rate (30°F temp. rise, water only)		

SF2000		
GPM	Temp. Rise °F	Boiler head loss Feet w.c.
85	44.8	6.6
100	38.1	7.8
**** 127**	**30.0**	**11.5**
140	27.2	13.5
160	23.8	16.9
180	21.2	20.6
191	20.0	22.8
** Suggested design flow rate (30°F temp. rise, water only)		

Install water piping *(continued)*

Expansion tank and make-up water

1. Ensure expansion tank size will handle boiler and system water volume and temperature. See page 116 for boiler water content.

CAUTION Undersized expansion tanks cause system water to be lost from relief valve and make-up water to be added through fill valve. Eventual boiler failure can result due to excessive make-up water addition.

2. Tank must be located as shown in this manual, or following recognized design methods. See tank manufacturer's instructions for details.
3. Connect the expansion tank to the air separator only if the separator is on the suction side of the pump. Always install the system fill connection at the same point as the expansion tank connection to the system.
4. Most piping drawings in this manual show diaphragm expansion tanks. See Figure 14 for piping from air separator to expansion tank and make-up water line using a closed-type expansion tank.
5. Most chilled water systems are piped using a closed-type tank, as shown in Figure 20, page 21.

Diaphragm (or bladder) expansion tank

1. (Figure 14) Always install an automatic air vent on top of the air separator to remove residual air from the system.

NOTICE When using diaphragm or bladder tanks only — when the boiler is installed above the system main piping, install an automatic air vent in the top of the outgoing boiler piping to prevent air pocketing.

NOTICE The expansion tank needs to be pre-charged to the required system fill pressure before being connected to the system.

Closed-type expansion tank

1. See Figure 15, Alternate, for piping connections when using a closed-type expansion tank.
2. Pitch any horizontal piping up towards tank 1 inch per 5 feet of piping. Connect to tank with at least ¾" piping to allow room for air to rise.

CAUTION DO NOT install automatic air vents on closed-type expansion tank systems. Air must remain in the system and return to the tank to provide its air cushion. An automatic air vent would cause air to leave system, resulting in water-logging the expansion tank.

Figure 14 Expansion tank piping — diaphragm-type expansion tank

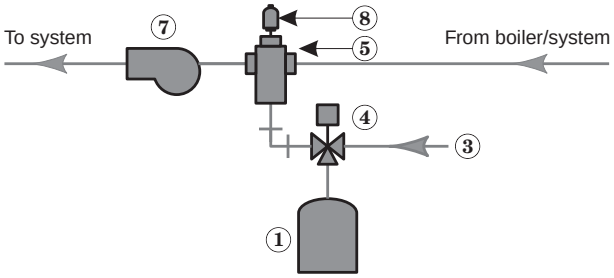

Figure 15 Expansion tank piping — closed-type expansion tank

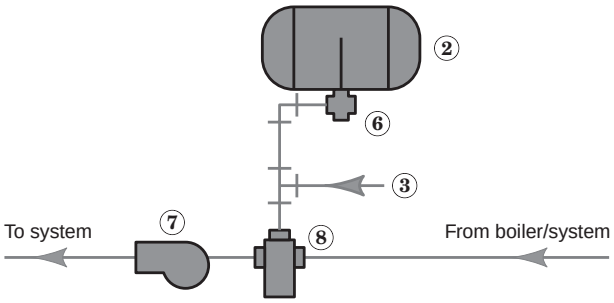

1 Diaphragm-type expansion tank.
2 Closed-type expansion tank.
3 Make-up water line.
4 Fill valve, typical.
5 Air separator.
6 Tank fitting.
7 System pump (when used).
8 Automatic air vent.

Install water piping *(continued)*

ZONE VALVE zoning – primary/secondary

(Shown with optional DHW piping) See Figure 16.

This configuration is for zone valve systems using a boiler loop connected as a secondary circuit off of a primary system loop. The primary/secondary piping shown ensures the boiler loop will have sufficient flow. It also avoids applying the high head of the boiler circulator to the zone valves.

1. Install a system circulator (supplied by installer) capable of delivering the proper flow and head as shown.
2. The flow/check valve shown on the boiler outlet piping prevents gravity circulation in the boiler loop during DHW heating.

CAUTION Use **at least** the **MINIMUM** pipe size shown in Figure 12, page 15 on all boiler loop piping (connecting boiler to and from the primary/secondary connection, item 21). **Primary/secondary piping shown** ensures the boiler loop will have sufficient flow. For other piping methods, see guidelines on page 15.

Expansion Tank required

1. Provide a system expansion tank following the guidelines on page 16.
2. **DO NOT** use a closed-type tank if connecting to a water heater that is equipped with an automatic vent.

Domestic Hot Water (DHW) tank, if used

1. DHW direct connection—Pipe from the near-boiler piping to the DHW tank's boiler connections as shown.
2. DHW as zone—A DHW tank can be connected as a zone if a DHW tank is **NOT** already connected to the boiler. See Advanced Manual to configure Boiler Pump to run during DHW demands and change TARGET MOD SENSOR to System Supply.
3. Priority of DHW/Space Heating:
   a. DHW Priority – DHW is priority over space heating. Use Priority 1 for DHW; Priorities 2 and/or 3 for space heating. The control will not run multiple priorities simultaneously.
   b. Space Heating Priority – Space heating is priority over DHW. Use Priorities 1 and/or 2 for space heating; Priority 3 for DHW. The control will not run multiple priorities simultaneously.
   c. No Priorities – Space heating and DHW can occur simultaneously. Use only if DHW is a zone in system. Assign DHW and Space heating to same Priority. Do not use outdoor reset for this application.

Controlling the circulators

1. The control can control up to four circulators (boiler circulator and three others). Refer to Field wiring, beginning on page 47, for instructions on wiring to circulators.
2. The factory default settings are: all three inputs are set up for Space Heating (Priority 2). Each input correlates to its respective circulator output.

Figure 16 Zone valve zoning plus optional DHW piping

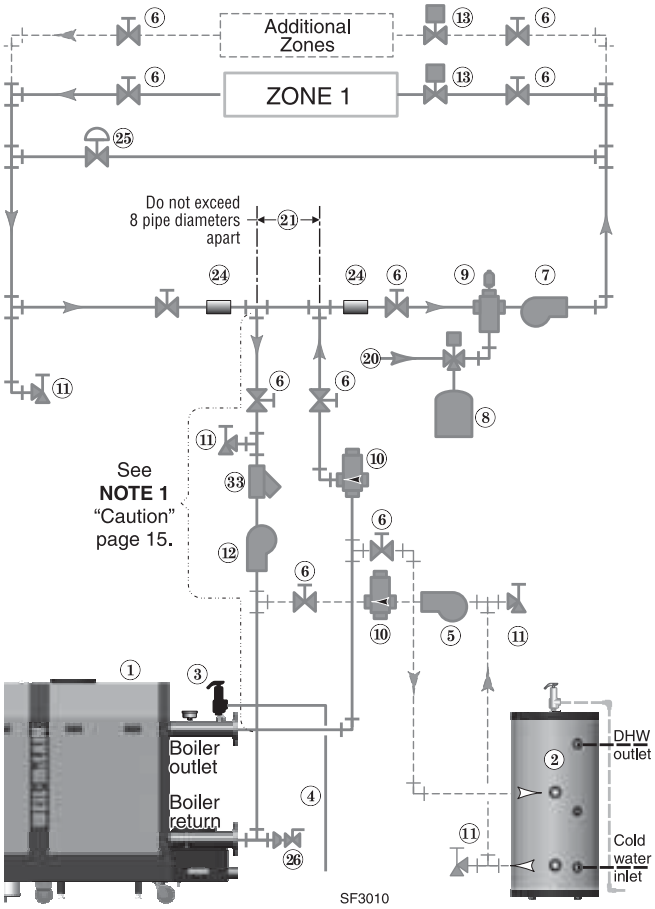

For DHW applications, assign DHW inputs to determined Priority (1, 2 or 3). Priority 1 is defaulted to DHW for DHW Priority applications.

3. For more than 3-zones, use Weil-McLain WMZV zone valve controller.

NOTICE Connect zone valve end switches to a Space Heating Priority input, (default Priority 2) to use default settings. Connect system circulator to corresponding output.

CAUTION Use isolation relays if connecting 3-wire zone valve end switches to the inputs.

Legend — Figure 16

1	SlimFit boiler	12	Boiler circulator
2	Indirect water heater (DHW), if used	13	Zone valves, typical
3	Boiler relief valve (see page 14 for piping details)	20	Make-up water supply
4	Relief valve discharge piping (see page 14 for details)	21	Primary/secondary connection (tees no more than 8 pipe diameters apart)
5	DHW circulator)	24	Strap system supply and return sensors to lines as shown, at least 6 pipe diameters (but no more than 3 feet) from boiler connection tees.
6	Isolation valves	25	Systems using high-head pumps may require a bypass pressure regulator to prevent damage to control valves.
7	System circulator (see information above for wiring)	26	External drain/blowdown valve, when used.
8	Diaphragm (or bladder) type expansion tank (see page 16 for piping of closed-type expansion tank, if used)	33	Strainer, recommended.
9	Air separator [with automatic air vent only on systems using diaphragm (or bladder) type expansion tank]	■	Items supplied with boiler
10	Flow/check valves	■	Items supplied by others
11	Purge/drain valves		

Install water piping *(continued)*

Zoning with zone valves — alternate High-flow-rate/high-head-loss DHW circuits

See Figure 17.

This configuration is for applications requiring DHW circuit flow rates higher than allowable for the boiler, or for high pressure-drop coil-type DHW tanks, connect the piping as in Figure 17. The DHW water only flows through the secondary circuit connection piping. The primary/secondary piping shown ensures the boiler loop will have sufficient flow. It also avoids applying the high head of the boiler circulator to the zone valves.

1. Make sure to size the connection piping (Figure 17, item 23) to handle the total flow it must handle.
2. Install a system circulator (supplied by installer) capable of delivering the proper flow and head as shown.
3. The flow/check valve shown on the boiler outlet piping prevents gravity circulation in the boiler loop during DHW heating.

⚠CAUTION Use **at least** the **MINIMUM** pipe size shown in Figure 12, page 15 on all boiler loop piping (connecting boiler to and from the primary/secondary connection, item 21). **Primary/secondary piping shown** ensures the boiler loop will have sufficient flow. For other piping methods, see guidelines on page 15.

Expansion Tank required

1. Provide a system expansion tank following the guidelines on page 16.
2. **DO NOT** use a closed-type tank if connecting to a water heater that is equipped with an automatic vent.

Domestic Hot Water (DHW) tank, if used

1. DHW direct connection—Pipe from the near-boiler piping to the DHW tank's boiler connections as shown. See Advanced Manual to configure Boiler Pump to run during DHW demands.
2. DHW as Zone – not applicable to this application.
3. Priority of DHW/Space Heating:
   a. DHW Priority – DHW is priority over space heating. Use Priority1 for DHW; Priorities 2 and/or 3 for space heating. The control will not run multiple priorities simultaneously.
   b. Space Heating Priority – Space heating is priority over DHW. Use Priorities 1 and/or 2 for space heating; Priority 3 for DHW. The control will not run multiple priorities simultaneously.

Controlling the circulators

1. The control can control up to four circulators (boiler circulator and three others). Refer to Field wiring, beginning on page 47, for instructions on wiring to circulators.
2. The factory default settings are: all three inputs are set up for Space Heating (Priority 2). Each input correlates to its respective circulator output.

Figure 17 Zone valve zoning plus optional DHW piping

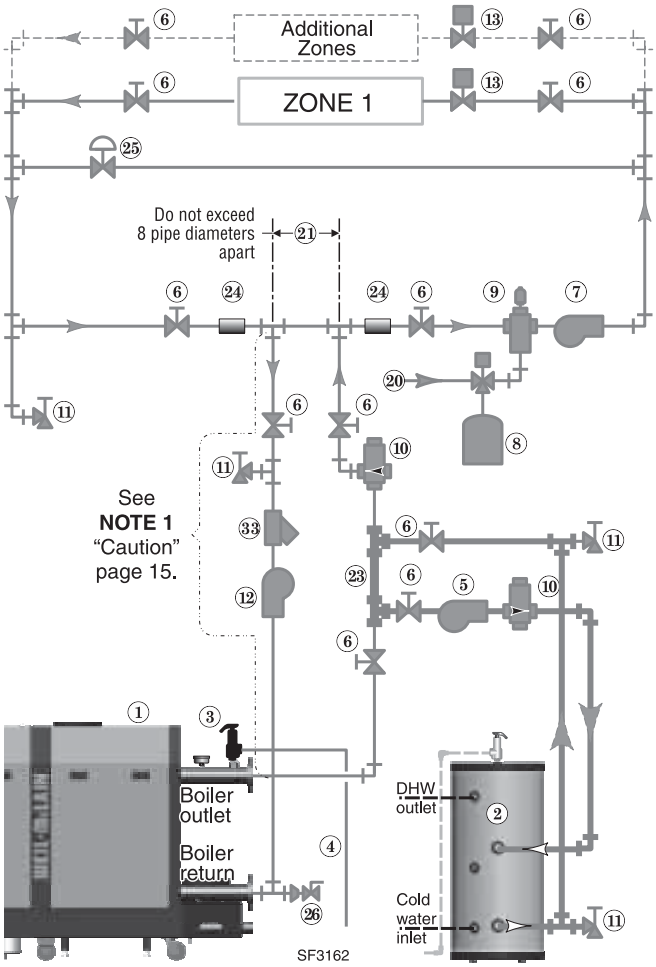

For DHW applications, assign DHW inputs to determined Priority (1, 2 or 3). Priority 1 is defaulted to DHW for DHW Priority applications.

3. For more than 3-zones, use Weil-McLain WMZV zone valve controller.

NOTICE Connect zone valve end switches to a Space Heating Priority input, , (default Priority 2) to use default settings. Connect system circulator to corresponding output.

⚠CAUTION Use isolation relays if connecting 3-wire zone valve end switches to the inputs.

Legend — Figure 17

1	SlimFit boiler
2	Indirect water heater (DHW), if used
3	Boiler relief valve (see page 14 for piping details)
4	Relief valve discharge piping (see page 14 for details)
5	DHW circulator)
6	Isolation valves
7	System circulator (see information above for wiring)
8	Diaphragm (or bladder) type expansion tank (see page 16 for piping of closed-type expansion tank, if used)
9	Air separator [with automatic air vent only on systems using diaphragm (or bladder) type expansion tank]
10	Flow/check valves
11	Purge/drain valves
12	Boiler circulator
13	Zone valves, typical
20	Make-up water supply
21	Primary/secondary connection (tees no more than 8 pipe diameters apart)
23	DHW secondary connector piping — no more than 8 pipe diameters apart.
24	Strap system supply and return sensors to lines as shown, at least 6 pipe diameters (but no more than 3 feet) from boiler connection tees.
25	Systems using high-head pumps may require a bypass pressure regulator to prevent damage to control valves.
26	External drain/blowdown valve, when used.
33	Strainer, recommended.
■	Items supplied with boiler
■	Items supplied by others

Install water piping *(continued)*

Circulator zoning – primary/secondary

(Shown with optional DHW piping) See Figure 18.

This configuration is for circulator-zoned systems using a boiler loop connected as a secondary circuit off of a primary system loop.

1. Install a separate circulator (supplied by installer) for each zone capable of delivering the proper flow and head as shown.
2. The flow/check valve shown on the boiler outlet piping prevents gravity circulation in the boiler loop during DHW heating.

⚠CAUTION Use **at least** the **MINIMUM** pipe size shown in Figure 12, page 15 on all boiler loop piping (connecting boiler to and from the primary/secondary connection, item 21). **Primary/secondary piping shown** ensures the boiler loop will have sufficient flow. For other piping methods, see guidelines on page 15.

Expansion Tank required

1. Provide a system expansion tank following the guidelines on page 16.
2. **DO NOT** use a closed-type tank if connecting to a water heater that is equipped with an automatic vent.

Domestic Hot Water (DHW) tank, if used

1. DHW direct connection—Pipe from the near-boiler piping to the DHW tank's boiler connections as shown.
2. DHW as zone—A DHW tank can be connected as a zone if a DHW tank is **NOT** already connected to the boiler. See Advanced Manual to configure Boiler Circulator to run during DHW demands and change TARGET MOD SENSOR to System Supply.
3. Priority of DHW/Space Heating:
   a. DHW Priority – DHW is priority over space heating. Use Priority1 for DHW; Priorities 2 and/or 3 for space heating. The control will not run multiple priorities simultaneously.
   b. Space Heating Priority – Space heating is priority over DHW. Use Priorities 1 and/or 2 for space heating; Priority 3 for DHW. The control will not run multiple priorities simultaneously.
   c. No Priorities – Space heating and DHW can occur simultaneously. Use only if DHW is a zone in system. Assign DHW and Space heating to same Priority. Do not use outdoor reset for this application.

Controlling the circulators

1. The control can control up to four circulators (boiler circulator and three others). Refer to Field wiring, beginning on page 47, for instructions on wiring to circulators. The boiler circulator cannot be used for a zone pump.

Figure 18 Pump zoning plus optional DHW piping — primary/secondary piping

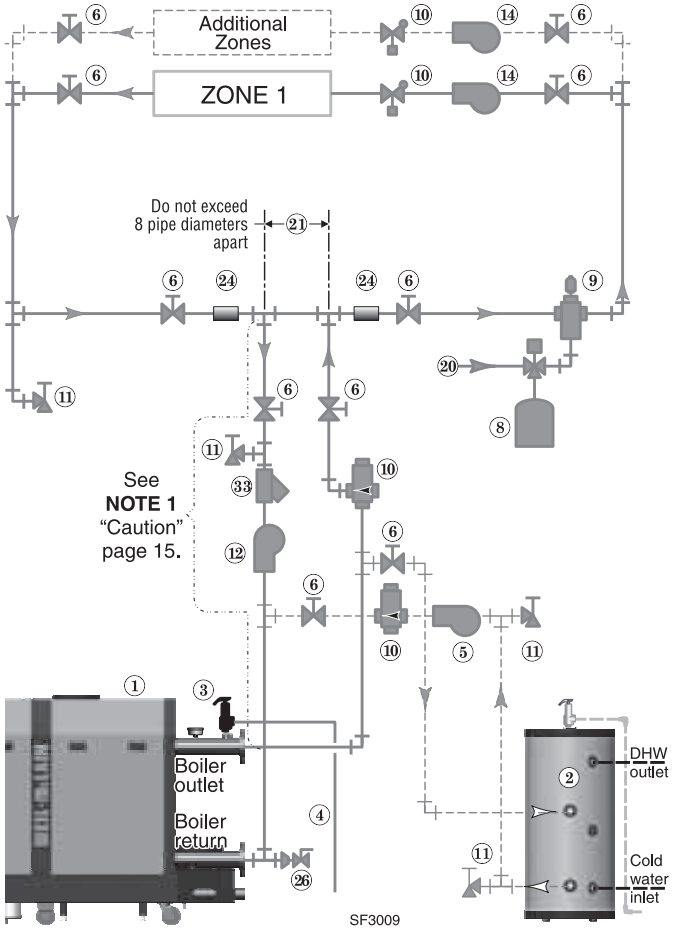

2. The factory default settings are: all three inputs are set up for Space Heating (Priority 2). Each input correlates to its respective circulator output. For DHW applications, assign DHW inputs to determined Priority (1, 2 or 3). Priority 1 is defaulted to DHW for DHW Priority applications.
3. For more than 3-zones, use Weil-McLain WMCR zone Circ controller.

Legend — Figure 18

1 SlimFit boiler	12 Boiler circulator
2 Indirect water heater (DHW), if used	14 Zone pumps, typical
3 Boiler relief valve (see page 14 for piping details)	20 Make-up water supply
4 Relief valve discharge piping (see page 14 for details)	21 Primary/secondary connection (tees no more than 8 pipe diameters apart)
5 DHW circulator)	24 Strap system supply and return sensors to lines as shown, at least 6 pipe diameters (but no more than 3 feet) from boiler connection tees.
6 Isolation valves	26 External drain/blowdown valve, when used.
8 Diaphragm (or bladder) type expansion tank (see page 16 for piping of closed-type expansion tank, if used)	33 Strainer, recommended.
9 Air separator [with automatic air vent only on systems using diaphragm (or bladder) type expansion tank]	■ Items supplied with boiler
10 Flow/check valves	■ Items supplied by others
11 Purge/drain valves	

Install water piping *(continued)*

Radiant Heating — Zone valve zoning – primary/secondary (Shown with optional DHW piping) See Figure 19.

The **SlimFit** boiler is ideal for use in radiant heating. The unique heat exchanger design allows it to work well even in condensing mode. There is no need to regulate boiler return water temperature in radiant heating applications. The primary/secondary piping shown ensures the boiler loop will have sufficient flow. It also avoids applying the high head of the boiler circulator to the zone valves.

1. Apply this configuration for typical radiant heating applications.
2. Size the system piping and circulators to provide the flow and pressure drop needed.
3. The flow/check valve shown on the boiler outlet piping prevents gravity circulation in the boiler loop during DHW heating.

CAUTION Use **at least** the **MINIMUM** pipe size shown in Figure 12, page 15 on all boiler loop piping (connecting boiler to and from the primary/secondary connection, item 21). **Primary/secondary piping shown** ensures the boiler loop will have sufficient flow. For other piping methods, see guidelines on page 15.

High limit in system piping

1. Add the recommended high limit control (Figure 19, item 22) to help ensure supply water temperature will not exceed the maximum allowable for the radiant system.
2. Wire the limit control to either the manual reset or automatic reset external limit circuit of the Control.

Expansion Tank required

1. Provide a system expansion tank following the guidelines on page 16.
2. **DO NOT** use a closed-type tank if connecting to a water heater that is equipped with an automatic vent.

Domestic Hot Water (DHW) tank, if used

1. DHW direct connection—Pipe from the near-boiler piping to the DHW tank's boiler connections as shown.
2. DHW as zone— Not recommended for this application.
3. Priority of DHW/Space Heating:
   a. DHW Priority – DHW is priority over space heating. Use Priority 1 for DHW; Priorities 2 and/or 3 for space heating. The control will not run multiple priorities simultaneously.
   b. Space Heating Priority – Space heating is priority over DHW. Use Priorities 1 and/or 2 for space heating; Priority 3 for DHW. The control will not run for DHW. The control will not run multiple priorities simultaneously.

Controlling the circulators

1. The control can control up to four circulators (boiler circulator and three others). Refer to Field wiring, beginning on page 47, for instructions on wiring to circulators.
2. The factory default settings are: all three inputs are set up for Space Heating (Priority 2). Each input correlates to its respective circulator output.

Figure 19 Typical radiant heating system piping plus optional DHW

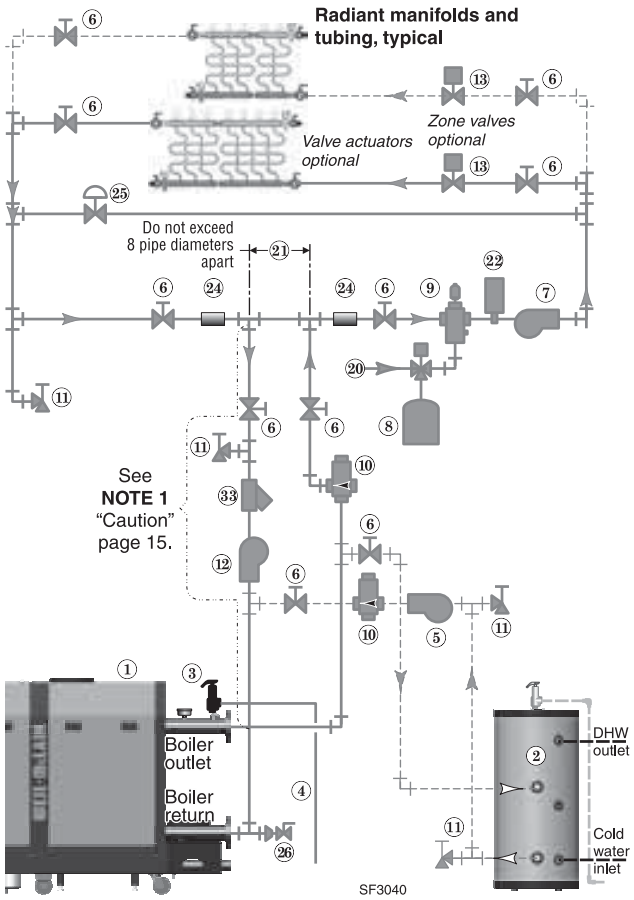

For DHW applications, assign DHW Input(s) to determined Priority (1, 2, or 3). Priority 1 is defaulted to DHW for DHW Priority applications.

3. For more than 3-zones, use Weil-McLain WMCR zone Circ controller.

NOTICE Connect zone valve end switches to a Space Heating Priority input, (default Priority 2) to use default settings Connect system circulator to corresponding output.

CAUTION Use isolation relays if connecting 3-wire zone valve end switches to the inputs.

Legend — Figure 19

1	SlimFit boiler	13	Zone valves, when used (zoning may also be done using manifold-mounted valve actuators).
2	Indirect water heater (DHW), if used	20	Make-up water supply
3	Boiler relief valve (see page 14 for piping details)	21	Primary/secondary connection (tees no more than 8 pipe diameters apart)
4	Relief valve discharge piping (see page 14 for details)	22	Optional high limit temperature control, set to protect radiant tubing.
5	DHW circulator)	24	Strap system supply and return sensors to lines as shown, at least 6 pipe diameters (but no more than 3 feet) from boiler connection tees.
6	Isolation valves	25	Systems using high-head pumps may require a bypass pressure regulator to prevent damage to control valves.
7	System circulator (see information above for wiring)	26	External drain/blowdown valve, when used.
8	Diaphragm (or bladder) type expansion tank (see page 16 for piping of closed-type expansion tank, if used)	33	Strainer, recommended.
9	Air separator [with automatic air vent only on systems using diaphragm (or bladder) type expansion tank]	■	Items supplied with boiler
10	Flow/check valves	■	Items supplied by others
11	Purge/drain valves		
12	Boiler circulator		

Install water piping *(continued)*

WATER CHILLER systems — ZONE VALVES primary/secondary

See Figure 20.

1. The chiller must be piped in parallel with the boiler.
2. Use appropriate valves to prevent chilled medium from entering boiler.
3. Circulator zoning option — The space heating system can be zoned with circulators if a separate circulator is supplied for the chilled water loop. Install a separate circulator for each zone.
4. The flow/check valve shown on the boiler outlet piping prevents gravity circulation in the boiler loop during DHW heating.

CAUTION Use **at least** the **MINIMUM** pipe size shown in Figure 12, page 15 on all boiler loop piping (connecting boiler to and from the primary/secondary connection, item 21). **Primary/secondary piping shown** ensures the boiler loop will have sufficient flow. For other piping methods, see guidelines on page 15.

NOTICE If antifreeze is used in the system, consider the effects of antifreeze on circulator sizing and DHW performance. Some local codes may require double-wall DHW heat exchanger design. Use only the antifreeze listed by Weil-McLain for use with this boiler. See page 105 for details.

WARNING Chilled medium, if used, is piped in parallel with heating boiler as shown in Figure 20. Use appropriate valves to prevent chilled medium from entering boiler. If boiler is connected to heating coils located in air handling units where they can be exposed to refrigerated air, use flow control valves or other automatic means to prevent gravity circulation during cooling cycle.

Expansion Tank required

1. Provide a system expansion tank following the guidelines on page 16.
2. **DO NOT** use a closed-type tank if connecting to a water heater that is equipped with an automatic vent.

Domestic Hot Water (DHW) tank, if used

1. DHW direct connection—Pipe from the near-boiler piping to the DHW tank's boiler connections as shown.
2. DHW as zone— Not recommended for this application.
3. Priority of DHW/Space Heating:
   a. DHW Priority – DHW is priority over space heating. Use Priority 1 for DHW; Priorities 2 and/or 3 for space heating. The control will not run multiple priorities simultaneously.
   b. Space Heating Priority – Space heating is priority over DHW. Use Priorities 1 and/or 2 for space heating; Priority 3 for DHW. The control will not run multiple priorities simultaneously.

Controlling the circulators

1. The control can control up to four circulators (boiler circulator and three others). Refer to Field wiring, beginning on page 47, for instructions on wiring to circulators.
2. The factory default settings are: all three inputs are setup for Space Heating (Priority 2). Each input correlates to its respective circulator output. For DHW applications, assign DHW Input(s) to determined Priority (1, 2, or 3). Priority 1 is defaulted to DHW for DHW Priority applications.
3. For more than 3-zones, use Weil-McLain WMZV zone valve controller.

NOTICE Connect zone valve end switches to a Space Heating Priority input, (default Priority 2) to use default settings Connect system circulator to corresponding output.

CAUTION Use isolation relays if connecting 3-wire zone valve end switches to the inputs.

Figure 20 Chilled water system plus optional DHW piping — primary/secondary piping

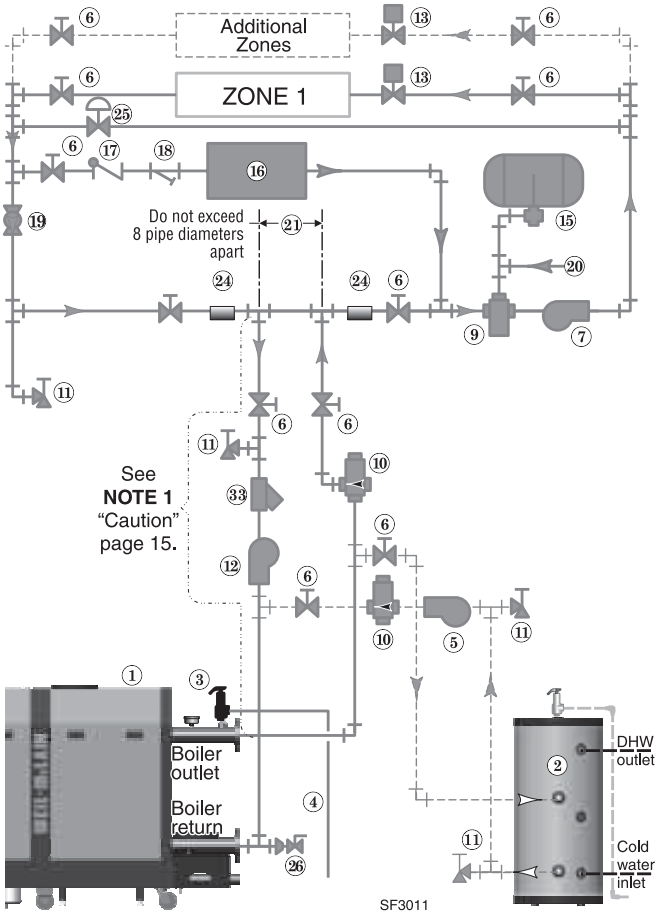

Legend — Figure 20			
1	SlimFit boiler	17	Check valve
2	Indirect water heater (DHW), if used	18	Strainer
3	Boiler relief valve (see page 14 for piping details)	19	Balancing valve
4	Relief valve discharge piping (see page 14 for details)	20	Make-up water supply
5	DHW circulator	21	Primary/secondary connection (tees no more than 8 pipe diameters apart)
6	Isolation valves	24	Strap system supply and return sensors to lines as shown, at least 6 pipe diameters (but no more than 3 feet) from boiler connection tees.
7	System circulator (see information above for wiring)	25	Systems using high-head pumps may require a bypass pressure regulator to prevent damage to control valves.
9	Air separator [with automatic air vent only on systems using diaphragm (or bladder) type expansion tank]	26	External drain/blowdown valve, when used.
10	Flow/check valves	31	Install a union on the boiler supply and return connections as close as possible to the boiler to allow disconnection for service when required.
11	Purge/drain valves		
12	Boiler circulator		
13	Zone valves, typical		
15	Closed-type expansion tank		
16	Water chiller		

■ Items supplied with boiler
■ Items supplied by others

Venting/air piping — Massachusetts installations

Venting instructions for the installations in the Commonwealth of Massachusetts

(a) For all sidewall horizontally-vented gas-fueled equipment installed in every dwelling, building or structure used in whole or in part for residential purposes, including those owned or operated by the Commonwealth and where the side wall exhaust vent termination is less than seven (7) feet above finished grade in the area of the venting, including but not limited to decks and porches, the following requirements shall be satisfied:

1. **INSTALLATION OF CARBON MONOXIDE DETECTORS**. At the time of installation of the side wall horizontal vented gas fueled equipment, the installing plumber or gas fitter shall observe that a hard wired carbon monoxide detector with an alarm and battery back-up is installed on the floor level where the gas equipment is to be installed. In addition, the installing plumber or gas fitter shall observe that a battery operated or hard wired carbon monoxide detector with an alarm is installed on each additional level of the dwelling, building or structure served by the side wall horizontal vented gas fueled equipment. It shall be the responsibility of the property owner to secure the services of qualified licensed professionals for the installation of hard wired carbon monoxide detectors
   a. In the event that the side wall horizontally vented gas fueled equipment is installed in a crawl space or an attic, the hard wired carbon monoxide detector with alarm and battery back-up may be installed on the next adjacent floor level.
   b. In the event that the requirements of this subdivision can not be met at the time of completion of installation, the owner shall have a period of thirty (30) days to comply with the above requirements; provided, however, that during said thirty (30) day period, a battery operated carbon monoxide detector with an alarm shall be installed.
2. **APPROVED CARBON MONOXIDE DETECTORS**. Each carbon monoxide detector as required in accordance with the above provisions shall comply with NFPA 720 and be ANSI/UL 2034 listed and IAS certified.
3. **SIGNAGE**. A metal or plastic identification plate shall be permanently mounted to the exterior of the building at a minimum height of eight (8) feet above grade directly in line with the exhaust vent terminal for the horizontally vented gas fueled heating appliance or equipment. The sign shall read, in print size no less than one-half (1/2) inch in size, "GAS VENT DIRECTLY BELOW. KEEP CLEAR OF ALL OBSTRUCTIONS."
4. **INSPECTION**. The state or local gas inspector of the side wall horizontally vented gas fueled equipment shall not approve the installation unless, upon inspection, the inspector observes carbon monoxide detectors and signage installed in accordance with the provisions of 248 CMR 5.08(2)(a) 1 through 4.

(b) **EXEMPTIONS**: The following equipment is exempt from 248 CMR 5.08(2)(a)1 through 4:

1. The equipment listed in Chapter 10 entitled "Equipment Not Required To Be Vented" in the most current edition of NFPA 54 as adopted by the Board; and
2. Product Approved side wall horizontally vented gas fueled equipment installed in a room or structure separate from the dwelling, building or structure used in whole or in part for residential purposes.

(c) **MANUFACTURER REQUIREMENTS — GAS EQUIPMENT VENTING SYSTEM PROVIDED**. When the manufacturer of Product Approved side wall horizontally vented gas equipment provides a venting system design or venting system components with the equipment, the instructions provided by the manufacturer for installation of the equipment and the venting system shall include:

1. Detailed instructions for the installation of the venting system design or the venting system components; and
2. A complete parts list for the venting system design or venting system.

(d) **MANUFACTURER REQUIREMENTS — GAS EQUIPMENT VENTING SYSTEM NOT PROVIDED**. When the manufacturer of a Product Approved side wall horizontally vented gas fueled equipment does not provide the parts for venting the flue gases, but identifies "special venting systems", the following requirements shall be satisfied by the manufacturer:

1. The referenced "special venting system" instructions shall be included with the appliance or equipment installation instructions; and
2. The "special venting systems" shall be Product Approved by the Board, and the instructions for that system shall include a parts list and detailed installation instructions.

(e) A copy of all installation instructions for all Product Approved side wall horizontally vented gas fueled equipment, all venting instructions, all parts lists for venting instructions, and/or all venting design instructions shall remain with the appliance or equipment at the completion of the installation.

Venting/combustion air — general

NOTICE There are two venting methods available. Follow the instructions on the following pages for the method used.

Method 1: Direct exhaust

- Combustion air taken from inside (no air piping connected to air intake)
- Sidewall or vertical termination

Method 2: Direct vent

- Combustion air piped to boiler from outside
- Sidewall or vertical termination

DANGER **SlimFit boilers must be vented and supplied with combustion and ventilation air using piping and methods described in this manual.**

DO NOT COMMON VENT Category IV boilers.
Every boiler must have its own vent. DO NOT common vent with any other appliance. See page 26 for checking appliances remaining on a common vent.

INSPECT VENT/AIR COMPONENTS
Inspect finished vent and air piping thoroughly to ensure all are airtight and comply with the instructions provided and with all requirements of applicable codes. Verify all air openings are correctly sized, unobstructed, and free of airborne contaminants.

Failure to provide a properly-installed vent and air system will cause severe personal injury or death.

WARNING **DO NOT INSULATE NONMETALLIC VENT PIPE**
Do not cover nonmetallic vent pipe with thermal insulation.

Code compliance

WARNING Venting/combustion air piping - Installations must provide provisions for combustion and ventilation air in accordance with the section "Air for Combustion and Ventilation," of the National Fuel Gas Code - ANSI Z223.1/NFPA54 – latest edition, or Sections 8.2, 8.3, or 8.4 of Natural Gas and Propane Installation Code - CAN/CSA B149.1, or applicable provisions of the local building codes.

Vent and air piping materials

WARNING Use only the materials listed in this manual (Figure 22, page 25) for vent and air pipe and fittings.

A masonry chimney can ONLY be used as a chase for vent and air piping

WARNING **If used, a masonry chimney can ONLY be used as a PIPE CHASE for vent and air pipes** — The vent and air piping must be installed as instructed in this manual and all joints must be sealed. The chimney must be used only as a chase for the SlimFit boiler vent/air piping. NO OTHER appliance or fireplace can be connected to the chimney.

The chimney must be straight, with no offsets, and the vent and air piping materials must comply with this instruction manual.

The chimney must be fitted with a sealed access opening, through which the interior of the chimney can be inspected.

The chimney and liner must be inspected at least once annually to verify condition.

Failure to comply could result in severe personal injury, death or substantial property damage.

Air openings for direct exhaust

1. Combustion air must be supplied through openings into the boiler room, following the instructions in this manual, and compliant with all applicable codes. Combustion air must not be exposed to any of the contaminants listed in Figure 21, page 24, and ensure the air and boiler room will not contain contaminated air.
2. Where the SlimFit boiler shares a space with other appliances, the combustion air openings must be sized to handle the combined requirements of all appliances in the space.

Combustion air piping for direct vent

1. Combustion air must be piped from outside to the boiler, following the instructions in this manual, and compliant with all applicable codes. Read the warning in Figure 21, page 24, and ensure the air intake will not be likely to draw in contaminated air.
2. Combustion air can be piped individually for each boiler, or it can be manifolded as shown in Figure 31, page 36. Combustion/ventilation openings may also be required in boiler room walls, per instructions in this manual and applicable codes.

Venting/combustion air — general *(continued)*

Combustion air contamination

1. **Direct exhaust** (combustion air from boiler room):
   a. Provide combustion air openings to boiler room as described in this manual.
   b. Ensure the boiler room and combustion air source areas are free of contaminants.
2. **Direct vent** (combustion air piped from outside):
   a. Install air inlet piping for the SlimFit boiler as described in this manual.
   b. Do not terminate air piping in locations that can allow contamination of combustion air.
3. See Figure 21 for products and areas which may cause contaminated combustion air.

Figure 21 Corrosive contaminants and sources

Products to avoid	Areas likely to have contaminants
Spray cans containing chloro/fluorocarbons	Dry cleaning/laundry areas and establishments
Permanent wave solutions	Swimming pools
Chlorinated waxes/cleaners	Metal fabrication plants
Chlorine-based swimming pool chemicals	Beauty shops
Calcium chloride used for thawing	Refrigeration repair shops
Sodium chloride used for water softening	Photo processing plants
Refrigerant leaks	Auto body shops
Paint or varnish removers	Plastic manufacturing plants
Hydrochloric acid/muriatic acid	Furniture refinishing areas and establishments
Cements and glues	New building construction
Antistatic fabric softeners used in clothes dryers	Remodeling areas
Chlorine-type bleaches, detergents, and cleaning solvents found in household laundry rooms	Garages with workshops
Adhesives used to fasten building products and other similar products	
Excessive dust and dirt	

Venting/combustion air — options

Boiler vent and air connections:

Provide a vent pipe mfr's **Slim-Fit VENT/AIR ADAPTER** at boiler vent connection and air connection (if used). See Figure 96, page 105 for part/kit numbers.

Provide pipe manufacturer's reducer(s) as needed to meet vent/air pipe size used.

WARNING **BIRD SCREENS —** Provide a vent manufacturer's **BIRD SCREEN at each termination**. Bird screens must be purchased from the vent/air piping supplier.

NOTICE **USE SWEEP ELBOWS FOR ALL VENT AND AIR PIPING WHEN POSSIBLE** — Short-radius elbows cause higher pressure loss, resulting in less allowable vent/air piping length. See Figure 24, page 29 for maximum lengths and reductions required for fittings.

WARNING **BOILER VENT/AIR CONNECTION GASKETS** Verify that the gasket is installed correctly, as shown in the images at right. The barbed band of the gasket must point DOWN.

BOILER VENT CONNECTION CLAMP DO NOT over-tighten the vent connection-to-vent adapter clamp. Tighten securely while checking to make sure that the clamping band does not deform or dig into the plastic vent connector.

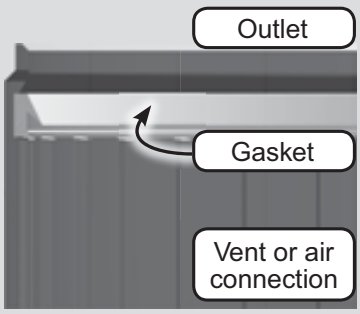

Venting/combustion air — options (Category II & IV)

Figure 22 Vent and air piping materials — Use only the materials listed below, ensuring that all materials meet local codes (see Figure 96, page 105 for vent/air part/kit numbers)

Items	Material	Supplier / Manufacturer	United States	Canada
Vent or air pipe and fittings	Polypropylene	Duravent / M&G – Polypro	Certified for Category IV and direct vent appliance venting	Plastic vent pipe must be certified to ULC S636 if required by local codes
		Centrotherm Eco Systems – InnoFlue® Single-wall	Certified for Category IV and direct vent appliance venting	Plastic vent pipe must be certified to ULC S636 if required by local codes
	AL29-4C stainless steel	Heat Fab, Inc. — Saf-T-Vent®	Certified for Category IV and direct vent appliance venting	Certified for Category IV and direct vent appliance venting
		Z-Flex, Inc. — Z-Vent II	Certified for Category IV and direct vent appliance venting	Certified for Category IV and direct vent appliance venting
		Dura-Vent — FasNSeal™	Certified for Category IV and direct vent appliance venting	Certified for Category IV and direct vent appliance venting
		Metal-Fab, Inc. — CORR/GUARD	Certified for Category IV and direct vent appliance venting	Certified for Category IV and direct vent appliance venting
	PVC Schedule 40 See Note 1 for additional requirements for using PVC on the exhaust. See Note 2.		ANSI/ASTM D1785	Plastic vent pipe must be certified to ULC S636 if required by local jurisdiction. Air pipe can be any of those listed at left if acceptable by local codes.
	PVC-DWV Schedule 40 See Note 1 for additional requirements for using PVC on the exhaust. See Note 2.		ANSI/ASTM D2665	Plastic vent pipe must be certified to ULC S636 if required by local jurisdiction. Air pipe can be any of those listed at left if acceptable by local codes.
	CPVC Schedule 40 See Note 2.		ANSI/ASTM F441	Plastic vent pipe must be certified to ULC S636 if required by local jurisdiction. Air pipe can be any of those listed at left if acceptable by local codes.
Primer and Cement	**PVC**		ANSI/ASTM D2564 (cement) ANSI/ASTM F656 (primer)	ULC S636 rated Primers and Cements
	CPVC		ANSI/ASTM F493 (cement) Primer that is approved for CPVC.	ULC S636 rated Primers and Cements
	CPVC to PVC transition		Use only a Primer and Cement that is suitable for joining CPVC and PVC pipe.	ULC S636 rated Primers and Cements

Notes:

DANGER

1. PVC can only be used on the exhaust of a boiler after 10 linear feet of CPVC pipe. All fittings within the first 10 feet must be CPVC. See Figure 23, page 26 .
2. For CPVC/PVC , See Figure 96, page 105 for SlimFit adapters to connect boiler connection to CPVC/PVC pipe.

WARNING Every joint on vent and air piping must include a locking collar. Failure to supply locking collars could result in vent/air piping leakage. All PVC and CPVC joints should be permanently joined using the suitable primer and cement for the vent material.

WARNING **DO NOT USE**: Cellular core PVC (ASTM F891), cellular core CPVC, or Radel® (polyphenolsulfone) pipe or any other material not listed in the table above.

WARNING DO NOT mix piping from different pipe manufacturers unless using adapters specifically designed for the purpose by the manufacturer.

Figure 23 PVC Venting allowed per requirements specified below.

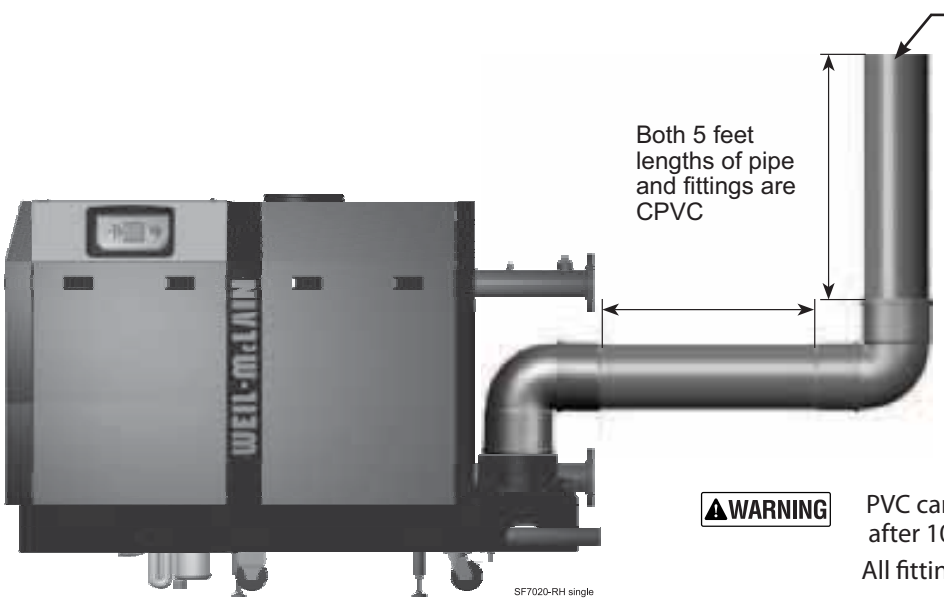

WARNING PVC can only be used on the exhaust of a boiler after 10 linear feet of CPVC pipe.
All fittings within the first 10 feet must be CPVC.

Appliances remaining on an existing vent system

DANGER Do not install the SlimFit boiler into a common vent with any other appliance. This will cause flue gas spillage or appliance malfunction, resulting in possible severe personal injury, death or substantial property damage.

WARNING Existing common vent systems may be too large for the appliances remaining connected after the existing boiler is removed.

WARNING Failure to follow all instructions can result in flue gas spillage and carbon monoxide emissions, causing severe personal injury or death.

When removing a boiler from an existing common vent system

The SlimFit boiler cannot be common vented with any other appliances. See Category II venting requirements for additional venting options. When an existing boiler is replaced with a SlimFit boiler, the SlimFit boiler CANNOT use the existing common vent. The SlimFit boiler requires its own vent and air piping, as specified in this manual. This may cause a problem for the appliances that remain on the old common vent, because the vent may be too large. The following test is intended to check for proper operation of the appliances remaining on the old common vent system.

Vent system verification

At the time of removal of an existing boiler, the following steps shall be followed with each appliance remaining connected to the common venting system placed in operation, while the other appliances remaining connected to the common venting system are not in operation. Seal any unused openings in the common venting system.

Existing vent test procedure

(The following is intended to test whether the appliances remaining on an existing vent system will operate satisfactorily.)

1. Visually inspect the venting system for proper size and horizontal pitch and determine there is no blockage or restriction, leakage, corrosion or other deficiencies which could cause an unsafe condition.
2. Test vent system — Insofar as is practical, close all building doors and windows and all doors between the space in which the appliances remaining connected to the common venting system are located and other spaces of the building. Turn on clothes dryers and any appliance not connected to the common venting system. Turn on any exhaust fans, such as range hoods and bathroom exhausts, so they will operate at maximum speed. Do not operate a summer exhaust fan. Close fireplace dampers.
3. Place in operation the appliance being inspected. Follow the lighting instructions. Adjust thermostat so appliance will operate continuously.
4. Test for spillage at draft hood relief opening after 5 minutes of main burner operation. Use the flame of a match or candle, or smoke from a cigarette, cigar, or pipe.
5. After it has been determined that each appliance remaining connected to the common venting system properly vents when tested as outlined herein, return doors, windows, exhaust fans, fireplace dampers, and any other gas-burning appliance to their previous conditions of use.

Any improper operation of the common venting system should be corrected so the installation conforms with the National Fuel Gas Code - ANSI Z223.1/NFPA54 – latest edition, and/or the Natural Gas and Propane Installation Code, Natural Gas and Propane Installation Code - CAN/CSA B149.1. When resizing any portion of the common venting system, the common venting should be resized to approach the minimum size as determined using the appropriate tables in Chapter 13 of the National Fuel Gas Code - ANSI Z223.1/NFPA54 – latest edition, and/or the Natural Gas and Propane Installation Code, CAN/CSA B149.1.

Venting/combustion air — options (Category II)

Category II Requirements

In addition to the SlimFit boilers Category IV rating (positive pressure, likely to condense), SlimFit boilers are approved for Category II (negative pressure, likely to condense) as well.

This new venting option includes / requires:

- The Vent system for a Category II SlimFit boiler is considered a Designed / Engineered vent system and should be designed by a professional using accepted engineering practices in accordance to local authority having jurisdiction.
- Vertical Vent only.
- Must not be installed into an existing common vent system with other appliances.
- Combustion air from the boiler room. See Direct Exhaust Combustion Air opening requirements on page 31.
- Must use SlimFit Vent/Air adapter 10" diameter for Category II Vent Connection, see Figure 96, page 105 in this manual for approved adapters.
- The vent shall consist of a 3 foot piece of 10" diameter straight pipe directly after the SlimFit Vent/Air adapter before any diameter or direction changes in the vent.
- The Vent System should be designed so that the pressure in the vertical vent pipe immediately following the boiler is between the ranges provided in the Table 1 below, during all operating conditions i.e., High Fire, Low Fire, etc.
- Flue gas temperature should not exceed 216°F, the boiler will shut down and recycle if it does. The flue gas temperature should typically be within 20°F of the return water temperature of the boiler. If there is the potential for a wide variation in return water temperatures, the lowest possible temperature should be used for any calculations.
  Stack / Vent Flow Rate for each individual boiler model is listed in the table below. This flow rate is based on the unit running at 9.25% CO_2 and the maximum flue gas temperature of 216°F. The values can vary depending on the location of the installation and operating conditions.
- A carbon monoxide detector(s) is required in the boiler room for SlimFit boilers installed in a Category II configuration. The carbon monoxide detector must be wired on the same electrical circuit as the boiler. Check your local codes for any additional requirements of carbon monoxide detectors.

Figure 28a Venting

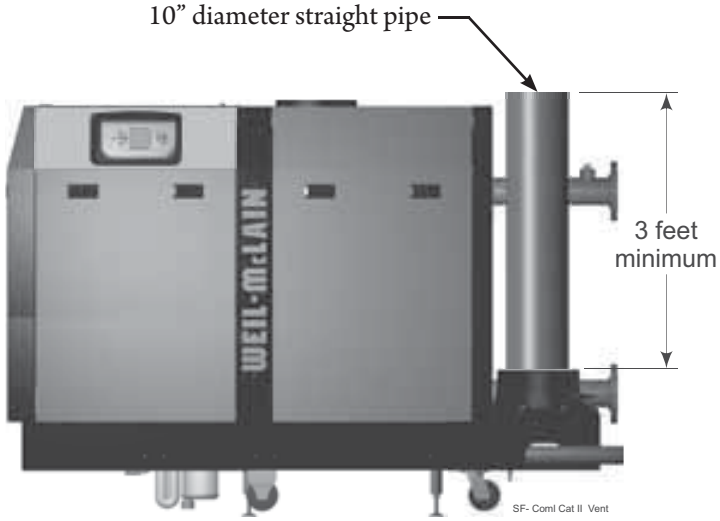

Table 1 Rating and Vent Data

Boiler Model	Input	Stack / Vent flow rate	Negative Pressure to be maintained at Vent Connection of the boiler	SlimFit Vent Adapter required for Category II
	Btuh	scfm	Inches w.c.	(See Note 1)
SF1000	1,000,000	279	-0.001 to -0.100	10"
SF1500	1,500,000	418	-0.001 to -0.100	10"
SF2000	2,000,000	558	-0.001 to -0.100	10"

Note 1: 10" Vent adapters are required for Category II venting, see Figure 108, page 117 "Vent/air piping components" for adapter part numbers.

Venting/combustion air — options (Category II)

WARNING Improper Installation of a Category II vent system resulting in positive pressure in the vent system can result in flue gas spillage and carbon monoxide emissions, causing severe personal injury or death.

NOTICE Weil-McLain recommends the use of a Variable Speed Chimney Fan / Power venter to ensure that the appropriate negative pressure range is kept for Category II venting. The reason this may be needed is due to the higher efficiency of the SlimFit boiler. The exhaust gas temperatures are lower which result in less draft when using a chimney fan/power venter. A flow proving switch should be wired into the LCI circuit on the boiler. The use of this device should be considered in any engineered vent system in accordance to local authority having jurisdiction.

NOTICE Weil-McLain recommends the use of a Double Acting Barometric Damper or Modulating Damper to ensure the appropriate negative pressure range is kept for Category II venting. The use of this device should be considered in any engineered vent system in accordance to local authority having jurisdiction.

NOTICE When using a damper of any kind, it is recommended to use a thermal spill switch to detect any exhaust flow into the boiler room. Verify the temperature range on the thermal spill switch is adequate for the Flue gas temperature from the SlimFit boiler. The use and set-point of this shall be determined by the system designer in accordance to local authority having jurisdiction.

Code Compliance

WARNING Venting / Combustion air piping – Installations must provide provisions for combustion and ventilation air in accordance with the section "Venting of Equipment", of the National Fuel Gas Code, ANSI Z223.1/NFPA 54, or "Venting Systems and Air Supply for appliances" of the Natural Gas and Propane Installation Code, CAN/CSA B149.1, or applicable provisions of the local building codes.

Venting/combustion air — options (Category II)

Figure 24 SlimFit boiler venting and air piping — OPTIONS and PIPING LIMITS — The table below lists the acceptable vent/air pipe terminations described in this manual.

USE ONLY the pipe materials listed in Figure 22, page 25 | See Figure 96, page 105 for part/kit numbers

Boiler vent and air connections:

Provide a vent pipe mfr's **SlimFit VENT/AIR ADAPTER** at boiler vent connection and air connection (if used). See Figure 96, page 105 for part/kit numbers

Provide vent pipe manufacturer's reducer(s) as needed to meet vent/air pipe size used.

SlimFit Model	Pipe Size	**SIDEWALL** Direct Exhaust	**VERTICAL** Direct Exhaust	**SIDEWALL** Direct Vent (vent and air out sidewall)	**VERTICAL** Direct Vent (vertical or sidewall air)
		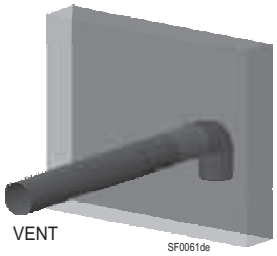	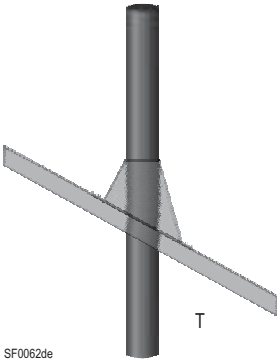	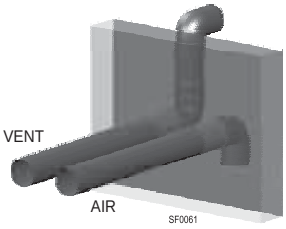	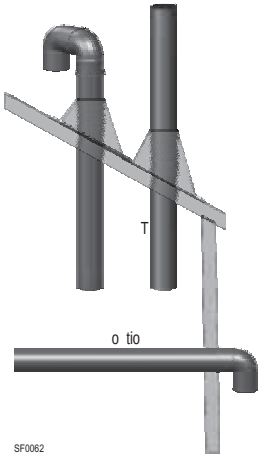
		See page 33	See page 35	See page 39	See page 41
		Max/Min length, feet *(note 1)*	Max/Min length, feet *(note 1)*	Max/Min length, feet *(note 1)*	Max/Min length, feet *(note 1)*
		Thickness for wall/roof vent penetration; Max: 8″ Min: 0″	Thickness for wall/roof vent penetration; Max: 8″ Min: 0″	Thickness for wall/roof vent penetration; Max: 8″ Min: 0″	Thickness for wall/roof vent penetration; inches Max: 8″ Min: 0″
SF1000	**6″**	**100 max / 6 min**	**100 max / 6 min**	**100 max / 6 min**	**100 max / 6 min**
	8″	**DO NOT USE 8″**	**DO NOT USE 8″**	**150 max / 6 min**	**150 max / 6 min**
SF1500	**6″**	**DO NOT USE 6″**	**DO NOT USE 6″**	**DO NOT USE 6″**	**DO NOT USE 6″**
	8″	**100 max / 6 min**	**100 max / 6 min**	**100 max / 6 min**	**100 max / 6 min**
SF2000	**6″**	**DO NOT USE 6″**	**DO NOT USE 6″**	**DO NOT USE 6″**	**DO NOT USE 6″**
	8″	**100 max / 6 min**	**100 max / 6 min**	**100 max / 6 min**	**100 max / 6 min**

Note 1	**REDUCE MAXIMUM VENT/AIR PIPE LENGTHS FOR ELBOWS** If the TOTAL number of elbows used in the vent and air piping and terminations is **more than two elbows in the vent piping and one elbow** in the air piping, **REDUCE** the maximum lengths above by the following lengths for each additional elbow (whether 45° or 90°). **6-inch vent/air piping — Reduce maximum allowable length by 15 feet for each additional elbow used.** **8-inch vent/air piping — Reduce maximum allowable length by 7 feet for each additional elbow used.** **NOTE**: **If the pipe manufacturer's equivalent lengths for elbows is LONGER than the values listed above, use the pipe manufacturer's value for length reduction per elbow instead.** Boilers will **derate** as vent/air pipe length increases — see Figure 108, page 116 for derate amount vs piping length.

DIRECT EXHAUST — Boiler room air openings (Category IV)

Combustion air provision

The SlimFit Commercial boiler can use inside air if no contaminants are present in the boiler space. (If contaminants are likely to be present, install the boiler as a direct vent appliance, using the appropriate vent instructions in this manual.)

The boiler room must be fitted with combustion air openings large enough to provide air for all appliances in the room. Use the following information to size the openings. Ensure the installation complies with all applicable codes and standards.

Sizing combustion air openings

Air openings provide for ventilation (as well as combustion air) to prevent overheating of the boiler controls and boiler space. Air is also needed for other appliances located in the same space.

Use Figure 25, page 31, selecting the appropriate installation conditions.

WARNING Air openings must be sized to handle all appliances and air movers (exhaust fans, etc.) using the air supply.

The sizing given in Figure 25, page 31 is based on the National Fuel Gas Code - ANSI Z223.1/NFPA54 – latest edition, allowing adequate air openings for gravity-vented gas appliances (Category I) in addition to that needed for the SlimFit boiler.

The SlimFit Commercial boiler is rated Category IV (pressurized vent), and has varying requirements for combustion and ventilation air, reflected by the special sizing instructions given in this manual.

The air openings recommended in Figure 25, page 31 will allow adequate ventilation and combustion air provided the boiler room is not subjected to negative pressure due to exhaust fans or other mechanical ventilation devices.

Refer to the National Fuel Gas Code - ANSI Z223.1/NFPA54 – latest edition for dealing with other conditions.

Free area — louver allowance

The free area of openings means the area **after reduction for any installed louvers or grilles**. Be sure to consider this reduction when sizing the air opening.

Special considerations

Tight construction

National Fuel Gas Code - ANSI Z223.1/NFPA54 – latest edition defines unusually tight construction where:

1. Walls and ceilings exposed to the outside atmosphere have a continuous water vapor retarder with a rating of 1 perm or less with openings gasketed, and . . .
2. Weather-stripping has been added on openable windows and doors, and . . .
3. Caulking or sealants are applied to areas such as joints around windows and door frames, between sole plates and floors, between wall-ceiling joints, between wall panels, at penetrations for plumbing, electrical, and gas lines, and in other openings.

For buildings with such construction, provide air openings into the building from outside, sized per the appropriate case in Figure 25, page 31 if appliances are to use inside air for combustion and ventilation.

Exhaust fans and air movers

The appliance space must never be under a negative pressure unless all appliances are installed as direct vent. Always provide air openings sized not only to the dimensions required for the firing rate of all appliances, but also to handle the air movement rate of the exhaust fans or air movers using air from the building or space.

Motorized air dampers

If the air openings are fitted with motorized dampers, electrically interlock the damper to:

- Prevent the boiler from firing if the damper is not fully open.
- Shut the boiler down should the damper close during boiler operation.

The **SlimFit** control provides a Closure switch function which will prevent the boiler from firing if the damper is not fully open or closes during boiler operation. Please refer to the Boiler Manual for installation and wiring instructions.

DIRECT EXHAUST — Boiler room air openings *(continued)* (Category IV)

Figure 25 MINIMUM combustion air openings for direct exhaust applications — **ALL OPENING SIZES ARE FREE AREA**

Air openings The required air opening sizes below are FREE AREA, after reduction for louver obstruction. Note the exception below for large spaces.	**SlimFit boiler *WITH* other appliances in room**	**SlimFit boiler WITHOUT other appliances in room**
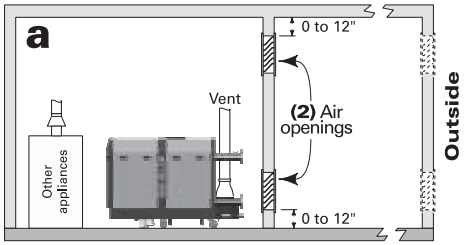	**TWO** openings, each at least: **1** square inch per **1,000** Btuh of all appliances in the room	**TWO** openings, each at least: **1** square inch per **4,000** Btuh of all appliances in the room
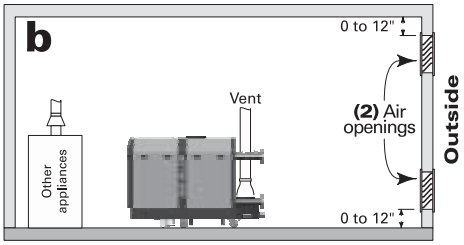	**TWO** openings, each at least: **1** square inch per **4,000** Btuh of all appliances in the room — OR — **ONE** opening **, each at least: **1** square inch per **3,000** Btuh of all appliances in the room	**TWO** openings, each at least: **1** square inch per **4,000** Btuh of all appliances in the room — OR — **ONE** opening **, each at least: **1** square inch per **3,000** Btuh of all appliances in the room
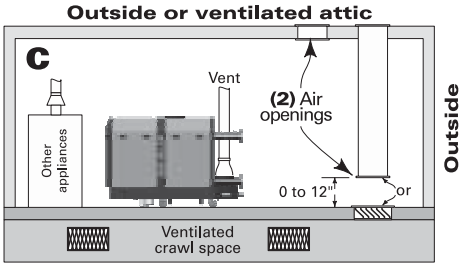	**TWO** openings, each at least: **1** square inch per **2,000** Btuh of all appliances in the room — OR — **ONE** opening **, each at least: **1** square inch per **3,000** Btuh of all appliances in the room	**TWO** openings, each at least: **1** square inch per **4,000** Btuh of all appliances in the room — OR — **ONE** opening **, each at least: **1** square inch per **3,000** Btuh of all appliances in the room
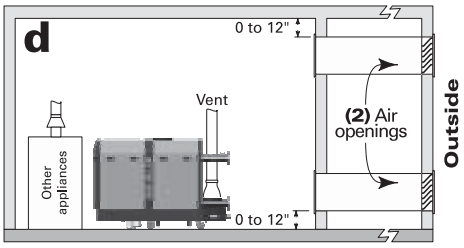	**TWO** openings, each at least: **1** square inch per **4,000** Btuh of all appliances in the room — OR — **ONE** opening **, each at least: **1** square inch per **3,000** Btuh of all appliances in the room	**TWO** openings, each at least: **1** square inch per **4,000** Btuh of all appliances in the room — OR — **ONE** opening **, each at least: **1** square inch per **3,000** Btuh of all appliances in the room
**** NOTICE:** **Requirements for using the SINGLE air opening option.**	A single combustion air opening can be used for cases **b**, **c** or **d** above, sized as listed, provided that: • The single opening must communicate directly to the outdoors or to a space that communicates directly with outdoors (NOT to an interior space). • The top of the opening must be within 12 inches of the ceiling. • The free area of the opening must be at least equal to the sum of the areas of all equipment vent connectors in the space.	
SPECIAL EXCEPTION FOR LARGE SPACES:	NO combustion air openings are needed when the boiler (and other appliances) are installed in a space with a volume NO LESS than 50 cubic feet per 1,000 Btuh of all appliances in the space. That is, total the input of all appliances in MBH (1,000's of Btuh), then multiply this total times 50. The building MUST NOT be of tight construction. Example: For a total input of 1500 MBH (1,500,000 Btuh) and an 8-foot ceiling height, the minimum volume would be 50 x 1500 = 75,000 cubic feet.	

DIRECT EXHAUST — Termination location (Category IV)

Figure 26 DIRECT EXHAUST INSTALLATIONS — Requirements for termination location — clearances and placement

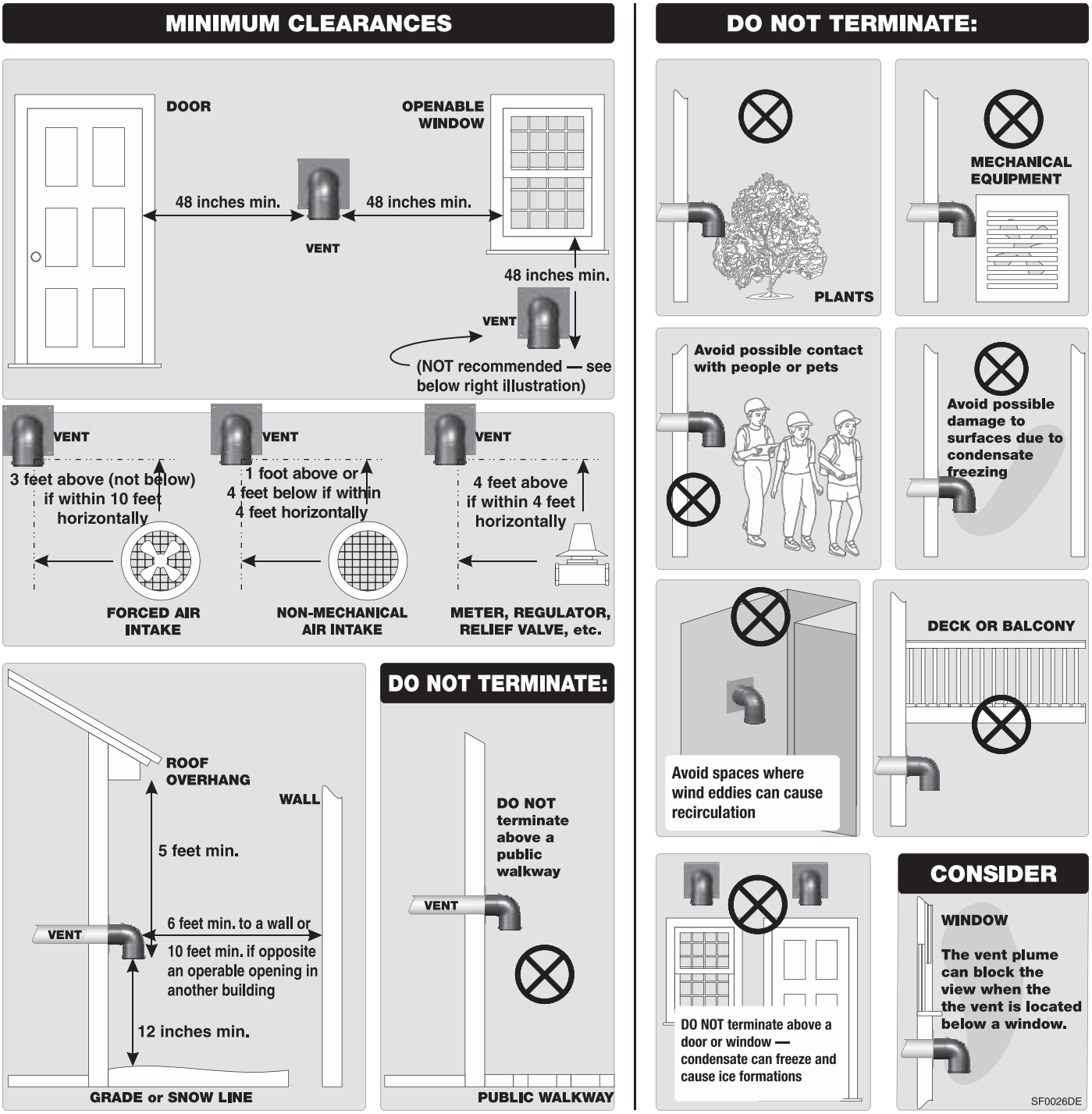

⚠WARNING **Vent Termination Locations** – the minimum distance from adjacent public walkways, adjacent buildings, openable windows and building openings shall not be less than those values specified in the National Fuel Gas Code - ANSI Z223.1/NFPA54 – latest edition, and/or the Natural Gas and Propane Installation Code, CAN/CSA B149.1. Vent and air terminations must be installed at least 12 inches (0.31m) above grade and snow line. Consideration should be given to avoid possible damage caused by vent plumes and condensate when choosing a venting configuration and location. Maintain a minimum clearance of 4 ft. (1.22 m) horizontally from, and in no case above or below, unless a 4 ft. (1.22m) horizontal distance is maintained, from electrical meters, gas meters, regulators, and relief equipment.

DIRECT EXHAUST — Sidewall

(Category IV)

Figure 27 Sidewall direct exhaust termination

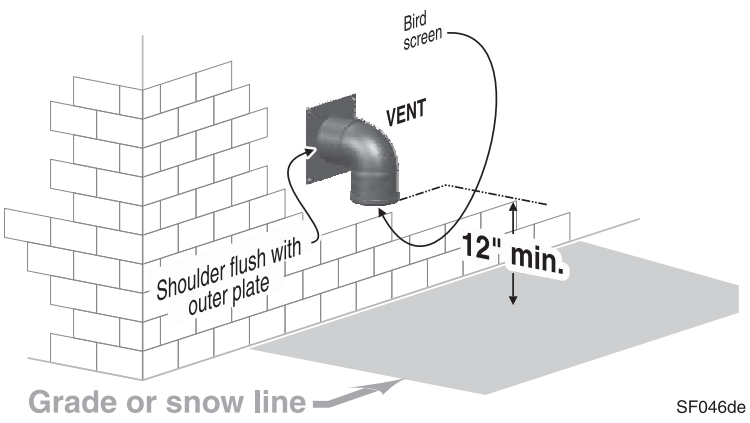

WARNING **Use only the vent materials and kits listed in Figure 22, page 25.**

Read and follow all instructions in this manual. **DO NOT proceed with vent installation until you have read page 23 through page 32.**

Locate the termination such that the total vent piping from the boiler to the termination **will not exceed the maximum length given in Figure 24, page 29**.

Comply with all vent system manufacturer's instructions.

Provide a vent manufacturer's SlimFit Vent Adapter and reducer (if needed) at the boiler vent connection.

Every joint on **polypropylene vent piping must** include a locking collar. Failure to supply locking collars could result in vent/air piping leakage.

Determine termination location

1. The vent termination must be installed as shown in Figure 27 and in Figure 29, page 34.
2. The termination placement must comply with clearances and limitations shown in Figure 26, page 32.
3. Locate the termination so is not likely to be damaged by foreign objects, such as stones or balls, or subject to buildup of leaves or sediment.
4. Ensure proper clearance above grade or snow line. Keep vents/air intake area clear of accumulating snow.
5. Install the boiler in a location that allows proper routing of all vent piping from the boiler vent connection to the selected sidewall location.

Multiple vent terminations

1. When terminating multiple SlimFit boilers, terminate each vent connection as described in this manual. See Figure 28, page 34 for typical layout.
2. Place wall penetrations to obtain minimum clearances shown in Figure 27 for U. S. installations.
3. For Canadian installations, provide clearances required by Natural Gas and Propane Installation Code - CAN/CSA B149.1 Installation Code and a ULC S636 compliant vent kit.

Install vent piping

WARNING See **WARNING** about boiler vent/air outlet seals and clamp on page 24. Verify that the seal is installed correctly before inserting the vent manufacturer's SlimFit Vent Adapter.

NOTICE **USE SWEEP ELBOWS FOR ALL VENT PIPING WHEN POSSIBLE** — Short-radius elbows cause higher pressure loss, resulting in less allowable vent/air piping length. See Figure 24, page 29 for maximum lengths and reductions required for fittings.

1. Install the vent manufacturer's SlimFit Vent Adapter in the boiler vent outlet. Follow all vent manufacturer instructions.
2. Install a vent manufacturer reducer if needed to adapt to the vent size being used.
3. Slope vent piping toward the boiler — slope vent piping a minimum of ¼ inch per foot in horizontal runs or larger per vent pipe manufacturer's instructions.
4. Support piping independently of the boiler — Install pipe supports every 5 feet on both the horizontal and vertical runs. Install a hanger support within 6 inches of any upturn in the piping. Or follow vent pipe manufacturer's instructions.

Install vent termination elbow

1. Maintain the required dimensions of the finished termination piping as shown in Figure 27, page 33.

DIRECT EXHAUST — Sidewall *(continued)* (Category IV)

2. Vent pipe penetration:
   a. Cut a hole for the vent pipe.
   b. For combustible construction, size the vent pipe hole at least ⅜" larger than the vent pipe diameter, or larger if specified by the vent manufacturer.
   c. For noncombustible construction, size the opening per vent manufacturer instructions.
   d. Insert a corrosion-resistant metal thimble in the vent pipe hole as shown in Figure 29.
   e. Follow all local codes for isolation of vent pipe when passing through floors or walls.
3. Figure 29 — Provide and install corrosion-resistant metal stop plates (item 3) as shown.
   a. The hole size in the stop plates must be just larger than the vent pipe diameter.
   b. Obtain stop plates ONLY from the vent pipe manufacturer.
4. Insert the last length of vent pipe from the outside. The shoulder of the vent pipe female end must rest against the outer stop plate as shown. The plate must prevent the vent from being pushed inward.
5. Insert the termination elbow into the vent pipe end.
6. Install a vent manufacturer's bird screen in the open end of the vent termination elbow.
7. Seal exterior openings thoroughly with exterior caulk.
8. For multiple boiler terminations, see Figure 28.

Figure 28 Multiple boiler direct exhaust sidewall terminations (see Figure 27, page 33 for required clearances)

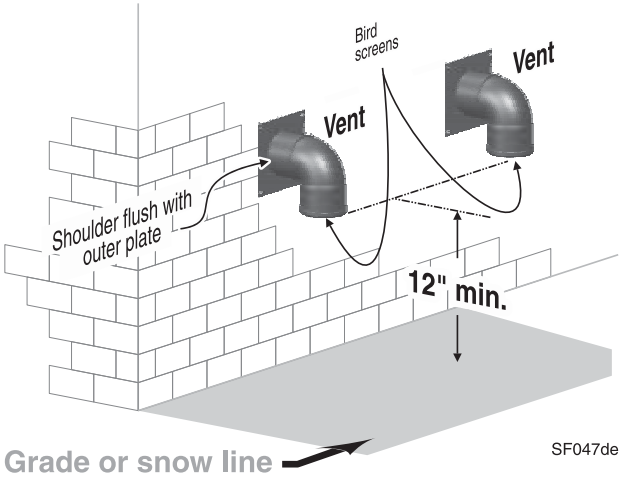

Figure 29 Sidewall termination assembly — direct exhaust installations

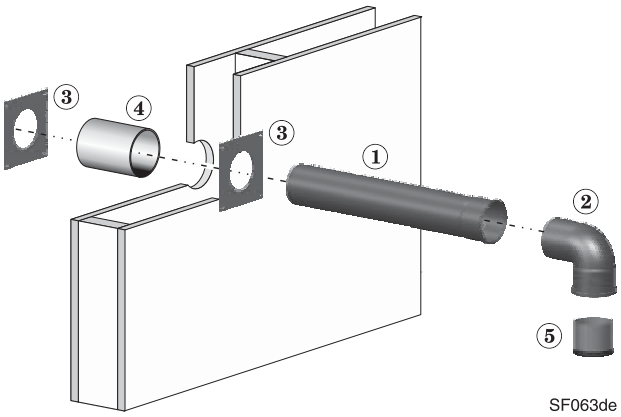

1. Vent piping — insert from the outside until the female end shoulder rests against the outside stop plate.
2. Vent termination elbow — use down-turned 90-degree elbow.
3. Vent manufacturer's sidewall stop plates (hole must be just larger than the vent diameter).
4. Corrosion-resistant thimble, by installer.
5. Vent manufacturer's bird screen, by installer.

DIRECT EXHAUST — Vertical (Category IV)

Figure 30 Vertical direct exhaust termination

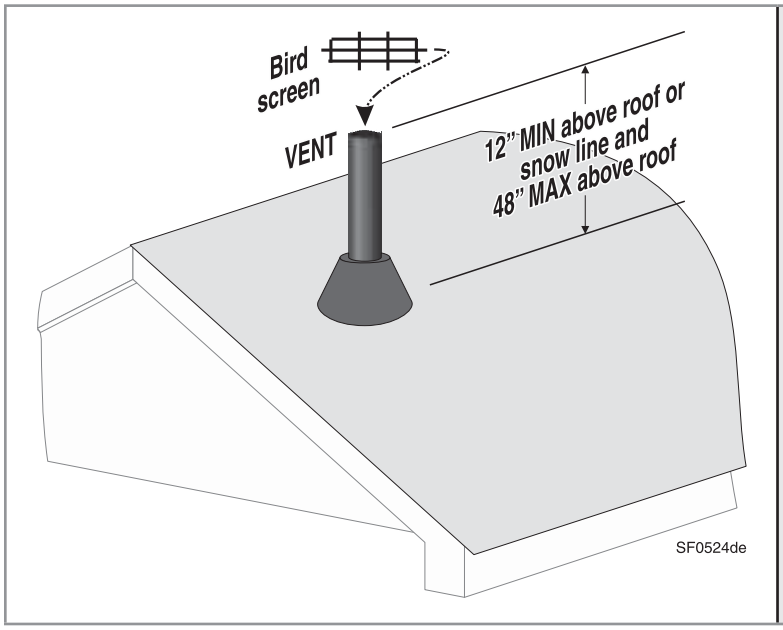

WARNING **Use only the vent materials and kits listed in Figure 22, page 25.**

Read and follow all instructions in this manual. **DO NOT proceed with vent installation until you have read page 23 through page 32.**

Locate the termination such that the total vent piping from the boiler to the termination **will not exceed the maximum length given in Figure 24, page 29.**

Comply with all vent system manufacturer's instructions.

Provide a vent manufacturer's SlimFit Vent Adapter and reducer (if needed) at the boiler vent connection.

Every joint on **polypropylene vent piping must** include a locking collar. Failure to supply locking collars could result in vent/air piping leakage.

Determine termination location

1. The vent termination must be installed as shown in Figure 30.
2. The termination placement must comply with clearances and limitations shown in Figure 26, page 32.
3. Locate the termination so is not likely to be damaged by foreign objects, such as stones or balls, or subject to buildup of leaves or sediment.
4. Ensure proper clearance above grade or snow line. Keep vents/air intake area clear of accumulating snow.
5. Install the boiler in a location that allows proper routing of all vent piping from the boiler vent connection to the selected sidewall location.

Multiple vent terminations

1. When terminating multiple SlimFit boilers, terminate each vent connection as described in this manual.
2. Place wall penetrations to obtain minimum clearances shown in Figure 30 for U. S. installations.
3. For Canadian installations, provide clearances required by Natural Gas and Propane Installation Code - CAN/CSA B149.1 Installation Code and a ULC S636 compliant vent kit.

Install vent piping

WARNING See **WARNING** about boiler vent/air outlet seals and clamp on page 24. Verify that the seal is installed correctly before inserting the vent manufacturer's SlimFit Vent Adapter.

NOTICE **USE SWEEP ELBOWS FOR ALL VENT PIPING WHEN POSSIBLE** — Short-radius elbows cause higher pressure loss, resulting in less allowable vent/air piping length. See Figure 24, page 29 for maximum lengths and reductions required for fittings.

1. Install the vent manufacturer's SlimFit Vent Adapter in the boiler vent outlet. Follow all vent manufacturer instructions.
2. Install a vent manufacturer reducer if needed to adapt to the vent size being used.
3. Slope vent piping toward the boiler — slope vent piping a minimum of ¼ inch per foot in horizontal runs or larger per vent pipe manufacturer's instructions.
4. Support piping independently of the boiler — Install pipe supports every 5 feet on both the horizontal and vertical runs. Install a hanger support within 6 inches of any upturn in the piping. Or follow vent pipe manufacturer's instructions.

Install vent termination

1. Vent pipe penetration:
   a. Cut a hole for the vent pipe.
   b. For combustible construction, size the vent pipe hole at least ⅜" larger than the vent pipe diameter, or larger if specified by the vent manufacturer.
   c. For noncombustible construction, size the opening per vent manufacturer instructions.
   d. Insert a corrosion-resistant metal thimble in the vent pipe hole.
   e. Follow all local codes for isolation of vent pipe when passing through floors, ceilings and roofs.
2. Provide flashing and sealing boots sized for the vent pipe.
3. Use a coupling or open-end pipe termination, following vent manufacturer's guidelines for vertical terminations.
4. Install a vent manufacturer's bird screen in the open end of the termination.
5. Maintain the required dimensions of the finished termination piping as shown in Figure 30.

WARNING Do not exceed the maximum length of the outside vent piping shown in Figure 30. Excessive length exposed to the outside could result in freezing of condensate in the vent pipe or vent/air piping failure. Follow vent/air pipe manufacturer's instructions for proper protection and support of the piping and for installations in very cold climates.

DIRECT VENT — Boiler room air openings (Category IV)

Combustion/ventilation air provision

For direct vent installations, combustion air must be ducted directly from outside to the SlimFit boiler air intake fitting. Two options are available: sidewall or vertical direct vent. Though combustion air is ducted to the SlimFit boiler, the boiler room will still require air openings, either for ventilation or for combustion air for other appliances plus ventilation.

Sizing air openings

Air openings provide for ventilation (as well as combustion air) to prevent overheating of the boiler controls and boiler space. Air is also needed for other appliances located in the same space.

Use Figure 32, page 37, selecting the appropriate installation conditions.

WARNING Air openings must be sized to handle all appliances and air movers (exhaust fans, etc.) using the air supply.

The sizing given in Figure 32, page 37 is based on the National Fuel Gas Code - ANSI Z223.1/NFPA54 – latest edition, allowing adequate air opening for gravity-vented gas appliances (Category I) when located in the same space as the SlimFit boiler.

When outside air is ducted as directed in this manual, the SlimFit boiler is rated as direct vent (pressurized vent), and has varying requirements for combustion and ventilation air, reflected by the special sizing instructions given in Figure 32, page 37.

The air openings recommended in Figure 32, page 37 will allow adequate ventilation and combustion air provided the boiler room is not subjected to negative pressure due to exhaust fans or other mechanical ventilation devices. Refer to the National Fuel Gas Code for dealing with other conditions.

Louver allowance

The free area of openings means the area **after reduction for any installed louvers or grilles**. Be sure to consider this reduction when sizing the air openings.

Special considerations

Tight construction

ANSI Z223.1/NFPA54 defines unusually tight construction where:

1. Walls and ceilings exposed to the outside atmosphere have a continuous water vapor retarder with a rating of 1 perm or less with openings gasketed, and . . .
2. Weather-stripping has been added on openable windows and doors, and . . .
3. Caulking or sealants are applied to areas such as joints around windows and door frames, between sole plates and floors, between wall-ceiling joints, between wall panels, at penetrations for plumbing, electrical, and gas lines, and in other openings.

For buildings with such construction, provide air openings into the building from outside, sized per the appropriate case in Figure 32, page 37 if appliances are to use inside air for combustion and ventilation.

Exhaust fans and air movers

The appliance space must never be under a negative pressure unless all appliances are installed as direct vent. Always provide air openings sized not only to the dimensions required for the firing rate of all appliances, but also to handle the air movement rate of the exhaust fans or air movers using air from the building or space.

Motorized air dampers

See "Motorized air dampers" on page 30 for recommendations on wiring motorized air dampers.

Manifolded combustion air option

1. Multiple SlimFit boilers can use a common combustion air manifold.
   a. Size the duct to provide at least 1 square inch per 1,000 Btuh total input of connected boilers.
   b. Provide minimum clearance to adjacent vents and grade/snow line as shown in Figure 31.
   c. Provide minimum free area in duct (adjusted for louver restriction) of **1 square inch per 2,000 Btuh** total boiler input, or divide the total MBH (1000's Btuh) by 2.
   d. Example: For an MBS system with total input of 3,000,000 Btuh, or 3,000 MBH: Divide 3,000 by 2 = 1500 square inches minimum for a combined air duct.
   e. If combustion air damper is used, wire to boilers to prevent operation except after damper has opened (see Motorized air dampers, above).

WARNING **ONLY air piping can be combined. DO NOT use combined Category IV vent piping. Flue gas leakage and boiler component damage can occur. Failure to comply could result in severe personal injury, death or substantial property damage.**

Figure 31 Manifolded combustion air option

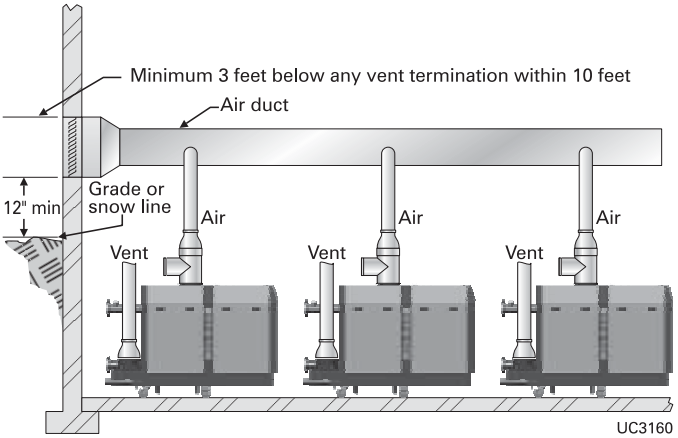

DIRECT VENT — Boiler room air openings *(continued)* (Category IV)

Figure 32 MINIMUM combustion air openings for direct vent applications — **ALL OPENING SIZES ARE FREE AREA**

Air openings The required air opening sizes below are FREE AREA, after reduction for louver obstruction. Note the exception below for large spaces.	**SlimFit boiler *WITH* other appliances in room**	**SlimFit boiler WITHOUT other appliances in room**
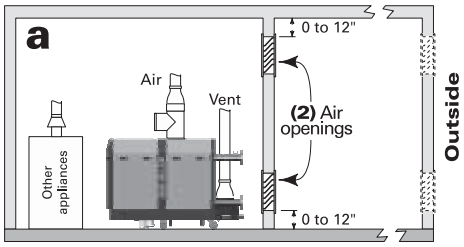	**TWO** openings, each at least: **1** square inch per **1,000** Btuh of all other appliances in the room	**NO** openings are required if the boiler installation provides at least the Recommended service clearances shown on page 7. If the space is smaller, provide ONE opening to a larger room with at least **1** square inch per **3,000** Btuh of SlimFit boiler input.
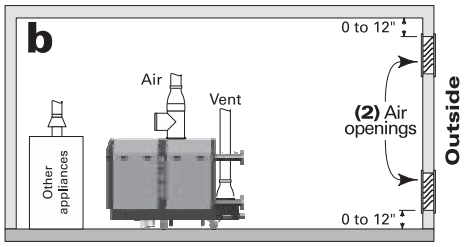	**TWO** openings, each at least: **1** square inch per **4,000** Btuh of all other appliances in the room — OR — **ONE** opening **, each at least: **1** square inch per **3,000** Btuh of all other appliances in the room	**NO** openings are required if the boiler installation provides at least the Recommended service clearances shown on page 7. If the space is smaller, provide ONE opening to a larger room with at least **1** square inch per **3,000** Btuh of SlimFit boiler input.
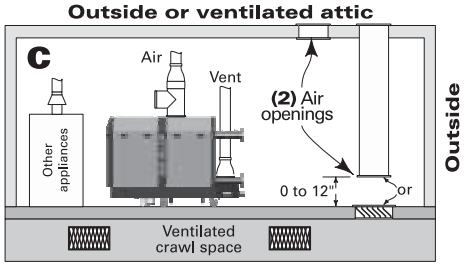	**TWO** openings, each at least: **1** square inch per **2,000** Btuh of all other appliances in the room — OR — **ONE** opening **, each at least: **1** square inch per **3,000** Btuh of all other appliances in the room	**NO** openings are required if the boiler installation provides at least the Recommended service clearances shown on page 7. If the space is smaller, provide ONE opening to a larger room with at least **1** square inch per **3,000** Btuh of SlimFit boiler input.
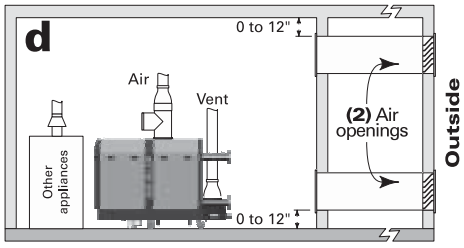	**TWO** openings, each at least: **1** square inch per **4,000** Btuh of all other appliances in the room — OR — **ONE** opening **, each at least: **1** square inch per **3,000** Btuh of all other appliances in the room	**NO** openings are required if the boiler installation provides at least the Recommended service clearances shown on page 7. If the space is smaller, provide ONE opening to a larger room with at least **1** square inch per **3,000** Btuh of SlimFit boiler input.
**** NOTICE:** **Requirements for using the SINGLE air opening option.**	A single combustion air opening can be used for cases **b**, **c** or **d** above, sized as listed, provided that: • The single opening must communicate directly to the outdoors or to a space that communicates directly with outdoors (NOT to an interior space). • The top of the opening must be within 12 inches of the ceiling. • The free area of the opening must be at least equal to the sum of the areas of all equipment vent connectors in the space.	
SPECIAL EXCEPTION FOR LARGE SPACES:	NO combustion air openings are needed when the boiler (and other appliances) are installed in a space with a volume NO LESS than 50 cubic feet per 1,000 Btuh of all appliances in the space. That is, total the input of all appliances in MBH (1,000's of Btuh), then multiply this total times 50. The building MUST NOT be of tight construction. Example: For a total input of 1500 MBH (1,500,000 Btuh) and an 8-foot ceiling height, the minimum volume would be 50 x 1500 = 74,000 cubic feet.	

DIRECT VENT — Termination location (Category IV)

Figure 33 DIRECT VENT INSTALLATIONS — Requirements for termination location — clearances and placement

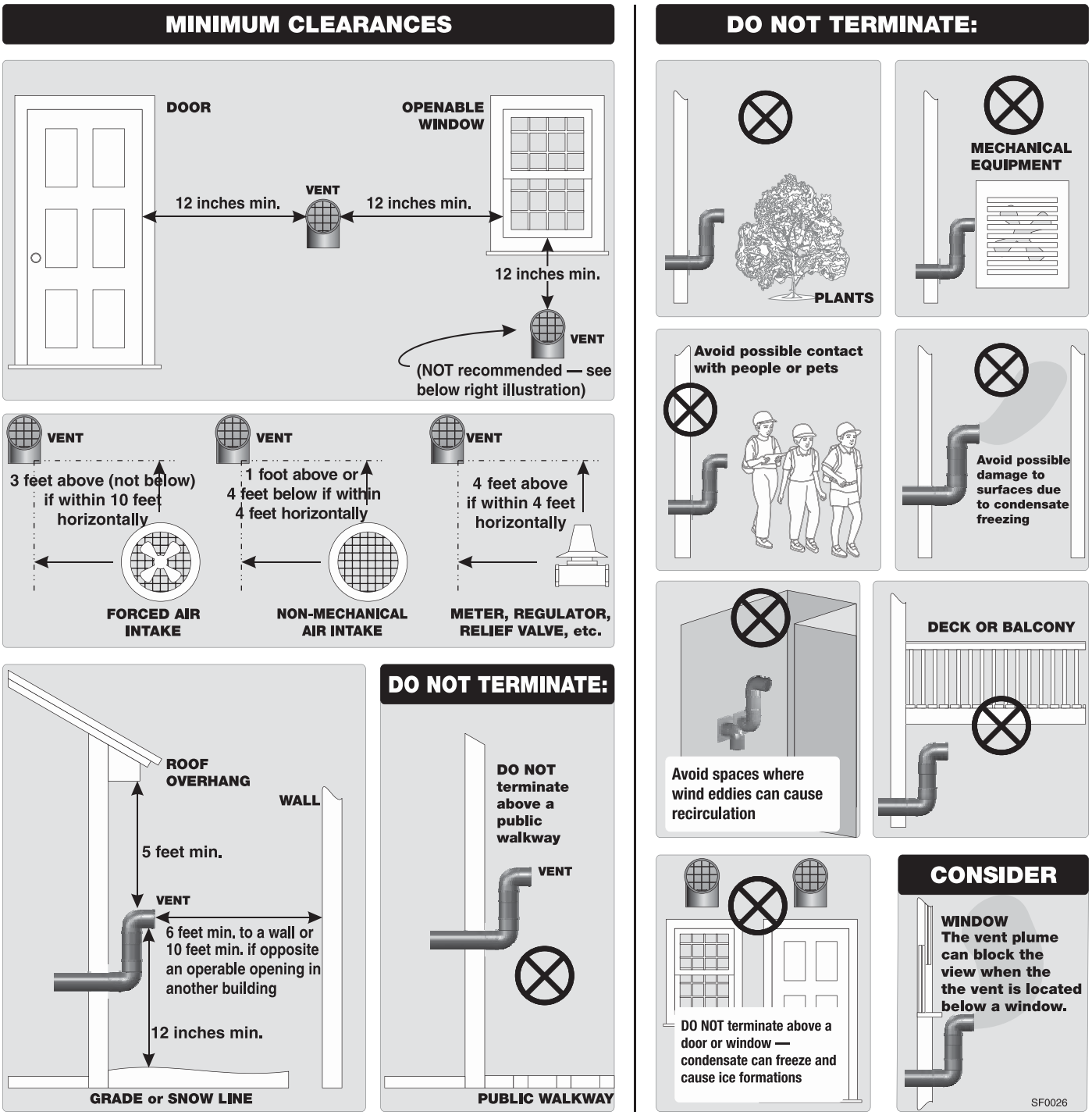

WARNING **Vent Termination Locations** – the minimum distance from adjacent public walkways, adjacent buildings, openable windows and building openings shall not be less than those values specified in the National Fuel Gas Code - ANSI Z223.1/NFPA54 – latest edition, and/or the Natural Gas and Propane Installation Code, CAN/CSA B149.1. Vent and air terminations must be installed at least 12 inches (0.31m) above grade and snow line. Consideration should be given to avoid possible damage caused by vent plumes and condensate when choosing a venting configuration and location. Maintain a minimum distance of at least 4 ft. (1.22 m) horizontally from, and in no case above or below, unless a 4 ft. (1.22m) horizontal distance is maintained, from electrical meters, gas meters, regulators, and relief equipment.

DIRECT VENT — Sidewall (Category IV)

Figure 34 Sidewall direct vent terminations — vent and air

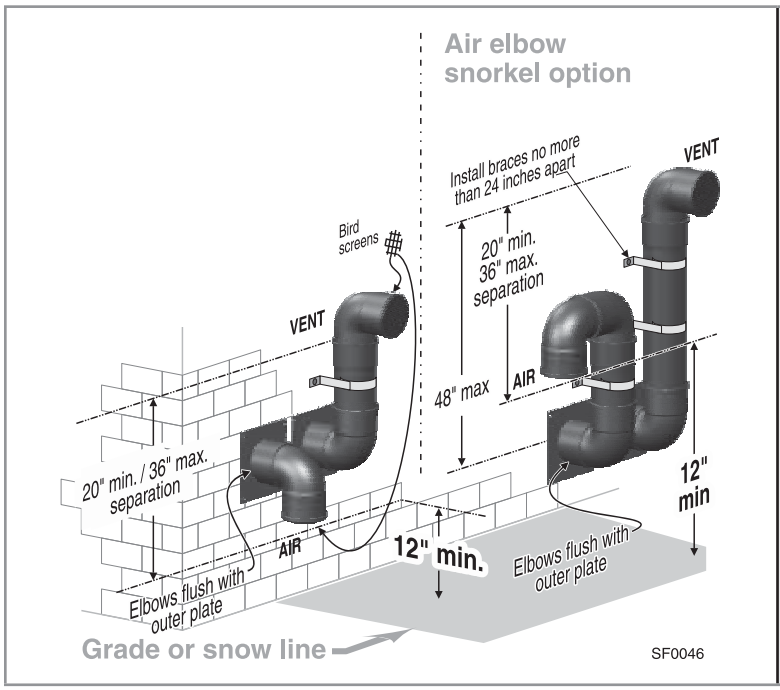

WARNING **Use only the vent/air materials and kits listed in Figure 22, page 25.**

Read and follow all instructions in this manual. **DO NOT proceed with vent/air installation until you have read page 23 through page 32 and page 36 through page 38.**

Locate the termination such that the total vent piping from the boiler to the termination **will not exceed the maximum length given in Figure 24, page 29.**

Comply with all vent system manufacturer's instructions.

Provide a vent manufacturer's SlimFit Vent Adapter and reducer (if needed) at the boiler vent connection.

Every joint on **polypropylene vent piping must** include a locking collar. Failure to supply locking collars could result in vent/air piping leakage.

Determine termination location

1. The vent termination must be installed as shown in Figure 34 and in Figure 37, page 40.
2. The termination placement must comply with clearances and limitations shown in Figure 26, page 32.
3. Locate the terminations so they are not likely to be damaged by foreign objects, such as stones or balls, or subject to buildup of leaves or sediment.
4. Ensure proper clearance above grade or snow line. Keep vents/air intake area clear of accumulating snow.
5. Install the boiler in a location that allows proper routing of all vent and air piping from the boiler vent and air connections to the selected sidewall location.

WARNING Do not exceed the maximum lengths of the outside vent piping shown in Figure 34. Excessive length exposed to the outside could result in freezing of condensate in the vent pipe or vent/air piping failure. Follow vent/air pipe manufacturer's instructions for proper protection and support of the piping. In extremely cold climates, install an insulated chase around the vent piping, particularly when using longer lengths. (DO not insulate nonmetallic vent pipe, if used.) The chase must allow for inspection of the vent pipe, and insulation must be protected from water.

Multiple vent terminations

1. When terminating multiple SlimFit boilers, terminate each vent connection as described in this manual. See Figure 36, page 40 for a typical layout.
2. Place wall penetrations to obtain minimum clearances shown in Figure 34 and in Figure 36, page 40 for U. S. installations.
3. For Canadian installations, provide clearances required by Natural Gas and Propane Installation Code - CAN/CSA B149.1. Installation Code and a ULC S636 compliant vent kit.

Install vent piping

WARNING See **WARNING** about boiler vent/air outlet seals and vent clamp on page 24. Verify that the seal is installed correctly before inserting the vent manufacturer's SlimFit Vent Adapter.

NOTICE **USE SWEEP ELBOWS FOR ALL VENT AND AIR PIPING WHEN POSSIBLE** — Short-radius elbows cause higher pressure loss, resulting in less allowable vent/air piping length. See Figure 24, page 29 for maximum lengths and reductions required for fittings.

1. Install the vent manufacturer's SlimFit Vent Adapter in the boiler vent outlet. Follow all vent manufacturer instructions.
2. Install a vent manufacturer reducer if needed to adapt to the vent size being used.
3. Slope vent piping toward the boiler — slope vent piping a minimum of ¼ inch per foot in horizontal runs or larger per vent pipe manufacturer's instructions.
4. Support piping independently of the boiler — Install pipe supports every 5 feet on both the horizontal and vertical runs. Install a hanger support within 6 inches of any upturn in the piping. Or follow vent pipe manufacturer's instructions.

Install vent termination fittings

1. Maintain the required dimensions of the finished termination piping as shown in Figure 27, page 33.
2. Air pipe penetration:
   a. Cut a hole for the air pipe, sized per the vent/air pipe manufacturer's instructions.

DIRECT VENT — Sidewall *(continued)* (Category IV)

3. Vent pipe penetration:
   a. Cut a hole for the vent pipe.
   b. For combustible construction, size the vent pipe hole at least ⅜" larger than the vent pipe diameter, or larger if specified by the vent manufacturer.
   c. For noncombustible construction, size the opening per vent manufacturer instructions.
   d. Insert a corrosion-resistant metal thimble in the vent pipe hole as shown in Figure 29.
   e. Follow all local codes for isolation of vent pipe when passing through floors or walls.
4. Figure 37 — Provide and install corrosion-resistant metal stop plates (item 3) as shown.
   a. The hole size in the stop plates must be just larger than the vent pipe diameter.
   b. Obtain stop plates ONLY from the vent pipe manufacturer.
5. Insert the last lengths of vent and air pipe from the outside. The shoulders of the vent and air pipe female ends must rest against the outer stop plates as shown. The plates must prevent the vent or air pipe from being pushed inward.
6. The vent and air pipes may run up as high as 4 feet with no enclosure. The vent and air pipes must be secured with braces, and all clearances and lengths must be maintained. Space braces no further than 24 inches apart.
7. External venting greater than 4 feet requires an insulated enclosure around the vent and air pipes. The vent and air terminations must exit through the enclosure as shown in the illustration above, maintaining all required clearances.
8. Attach the exterior piping and termination elbows.
9. Install a vent/air pipe manufacturer's bird screen in the open end of the vent termination elbow and air termination elbow.
10. Seal exterior openings thoroughly with exterior caulk.
11. For multiple boiler terminations, see Figure 36.

Provide access for cleaning the boiler air inlet

1. The boiler air inlet must be accessible for period examination and cleaning of the air inlet filter. This can be done by installing an 8-inch capped tee as shown in Figure 35 or by installing the air piping in a way that will allow disconnection of the air piping from the boiler air connection.
2. Install a pipe size reducer on top of the tee if using 6-inch air piping. DO NOT use a 6-inch tee.
3. Use only the air piping materials listed in Figure 22, page 25.

Figure 35 Direct venting — install tee on air inlet or provide means to disassemble the air piping to allow access to the inlet air filter

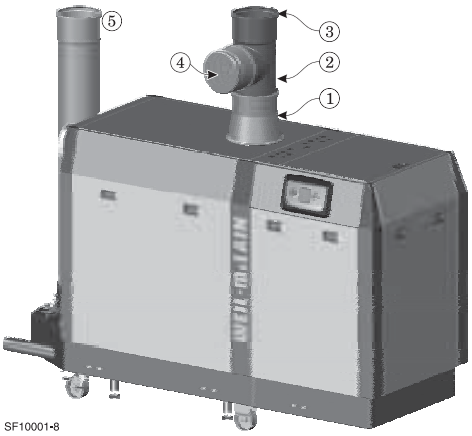

1. Vent/air pipe manufacturer's SlimFit Vent/Air Adapter, 8-inch outlet.
2. Vent/air pipe manufacturer's tee, 8-inch — orient the tee so the cover will be on the same side as the boiler heat exchanger cleanout cover.
3. Air pipe connection, 8-inch — add vent/air pipe manufacturer's reducer if using 6-inch air piping.
4. Vent/air pipe manufacturer's cover, 8-inch.
5. Vent piping (a vent/air pipe manufacturer's SlimFit Vent/Air Adapter must be installed at the boiler vent connection).

Use only the vent/air piping materials listed in Figure 22, page 25.

Figure 36 Multiple terminations — clearance from vent of one to air intake of the next (normal and snorkel layouts).

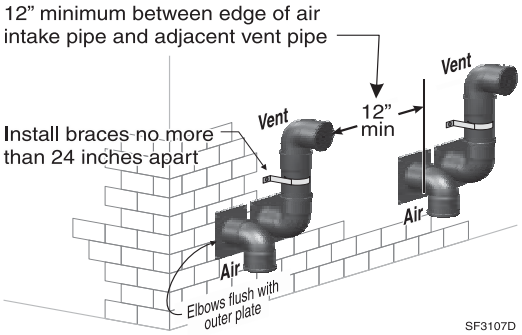

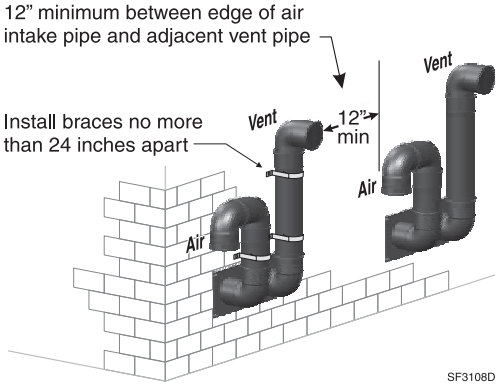

Figure 37 DIRECT VENT — sidewall termination assembly.

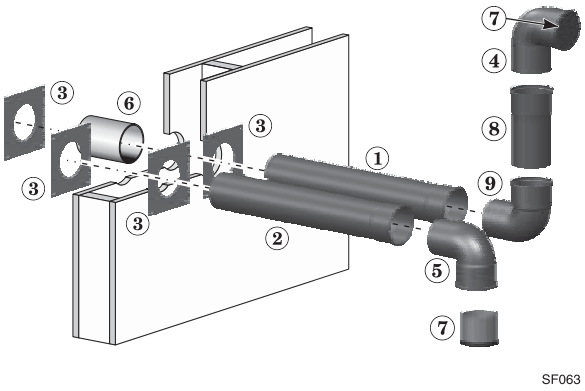

1. Vent piping — insert from the outside until the female end shoulder rests against the outside stop plate.
2. Air piping — insert from the outside until the female end shoulder rests against the outside stop plate.
3. Sidewall termination plates (hole must be just larger than the pipe diameter).
4. Vent termination elbow — use outward-facing 90-degree elbow as shown.
5. Air termination elbow — use down-turned 90-degree elbow as shown.
6. Corrosion-resistant thimble, by installer.
7. Bird screens, by installer.
8. Vent length.
9. Elbow.

DIRECT VENT — Vertical (Category IV)

Figure 38 Vertical direct vent terminations (air termination can be vertical or sidewall as shown below).

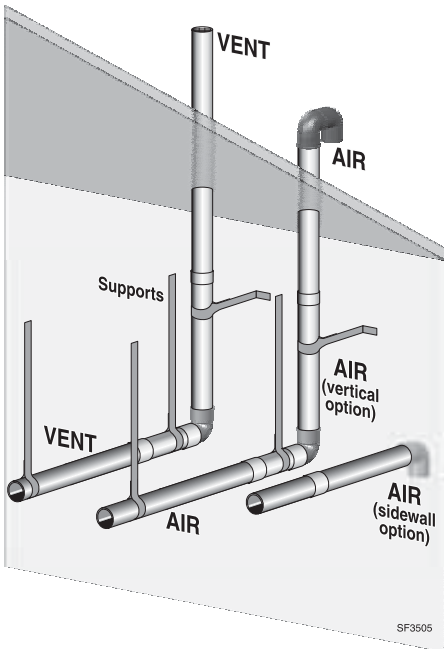

WARNING **Use only the vent/air piping materials and kits listed in Figure 22, page 25.**

Read and follow all instructions in this manual. **DO NOT proceed with vent/air piping installation until you have read page 23 through page 32 and page 36 through page 38**

Locate the termination such that the total vent piping from the boiler to the termination **will not exceed the maximum length given in Figure 24, page 29.**

Comply with all vent system manufacturer's instructions.

Provide a vent manufacturer's SlimFit Vent Adapter and reducer (if needed) at the boiler vent connection.

Every joint on **polypropylene vent piping must** include a locking collar. Failure to supply locking collars could result in vent/air piping leakage.

Determine termination location

1. The vent and air terminations must be installed as shown in Figure 38. The air termination can be either through the roof or through a side wall, as shown.
2. The termination placement must comply with clearances and limitations shown in Figure 26, page 32.
3. Locate the terminations so they are not likely to be damaged by foreign objects, such as stones or balls, or subject to buildup of leaves or sediment.
4. Ensure proper clearance above grade or snow line. Keep vents/air intake area clear of accumulating snow.
5. Provide means to access the boiler air inlet as instructed on page 42.
6. Install the boiler in a location that allows proper routing of all vent and air piping from the boiler vent and air connections to the selected termination locations.

WARNING Do not exceed the maximum lengths of the outside vent and air piping shown in Figure 39, page 42. Excessive length exposed to the outside could result in freezing of condensate in the vent pipe or vent/air piping failure. Follow vent/air pipe manufacturer's instructions for proper protection and support of the piping and for installations in very cold climates.

Multiple vent terminations

1. When terminating multiple SlimFit boilers, terminate each vent connection as described in this manual. When using sidewall air terminations, place terminations at least 6 inches apart.

WARNING Terminate all vent pipes at the same height and all air pipes at the same height to avoid possibility of severe personal injury, death or substantial property damage.

2. Place roof penetrations to obtain minimum clearance of 12 inches between edge of air intake elbow and adjacent vent pipe of another boiler for U. S. installations (see Figure 40, page 42).
3. For Canadian installations, provide clearances required by Natural Gas and Propane Installation Code - CAN/CSA B149.1 Installation Code and a ULC S636 compliant vent kit.

Install vent piping

WARNING See **WARNING** about boiler vent/air outlet seals and vent clamp on page 24. Verify that the seal is installed correctly before inserting the vent manufacturer's SlimFit Vent Adapter.

NOTICE **USE SWEEP ELBOWS FOR ALL VENT PIPING WHEN POSSIBLE** — Short-radius elbows cause higher pressure loss, resulting in less allowable vent/air piping length. See Figure 24, page 29 for maximum lengths and reductions required for fittings.

1. Install the vent/air pipe manufacturer's SlimFit Vent Adapter in the boiler vent and air outlets. Follow all vent/air pipe manufacturer's instructions.
2. Install a vent/air pipe manufacturer's reducer if needed to adapt to the vent size being used.
3. Slope vent piping toward the boiler — slope vent piping a minimum of ¼ inch per foot in horizontal runs or larger per vent pipe manufacturer's instructions.
4. Support piping independently of the boiler — Install pipe supports every 5 feet on both the horizontal and vertical runs. Install a hanger support within 6 inches of any upturn in the piping. Or follow vent/air pipe manufacturer's instructions.

DIRECT VENT — Vertical *(continued)* (Category IV)

Install vent and air terminations

1. Air pipe penetration
   a. Cut a hole for the air pipe, sized per the vent/air pipe manufacturer's instructions.
2. Vent pipe penetration:
   a. Cut a hole for the vent pipe.
   b. For combustible construction, size the vent pipe hole at least ⅜" larger than the vent pipe diameter, or larger if specified by the vent manufacturer.
   c. For noncombustible construction, size the opening per vent manufacturer instructions.
   d. Insert a corrosion-resistant metal thimble in the vent pipe hole.
   e. Follow all local codes for isolation of vent pipe when passing through floors, ceilings and roofs.
3. Vertical terminations, both vent and air
   a. Provide flashing and sealing boots sized for the vent pipe.
   b. Use a coupling or open-end pipe termination, following vent manufacturer's guidelines for vertical terminations.
   c. Install a vent/air pipe manufacturer's bird screen in the open ends of the terminations.
   d. Maintain the required dimensions of the finished termination piping as shown in Figure 39.
4. Vertical vent termination with sidewall air termination
   a. See Figure 41, page 43.
   b. Figure 42, page 43 — Provide and install corrosion-resistant metal stop plates (item 3) as shown.
   c. The hole size in the stop plates must be just larger than the vent pipe diameter.
   d. Obtain stop plates ONLY from the vent pipe manufacturer.
   e. Insert the last length of air pipe from the outside. The shoulder of the air pipe female end must rest against the outer stop plate as shown. The plate must prevent the air pipe from being pushed inward.
   f. Insert the termination elbow into the air pipe end.
   g. Install a vent manufacturer's bird screen in the open end of the vent termination elbow.
   h. Seal exterior openings thoroughly with exterior caulk.

Provide access for cleaning the boiler air inlet

1. The boiler air inlet must be accessible for periodic examination and cleaning of the air inlet filter. This can be done by installing an 8-inch capped tee as shown in Figure 43 or by installing the air piping in a way that will allow disconnection of the air piping from the boiler air connection.
2. Install a vent/air pipe manufacturer's reducer on top of the tee if using 6-inch air piping. DO NOT use a 6-inch tee.
3. Use only the air piping materials listed in Figure 22, page 25.

Figure 39 Vertical vent and air terminations.

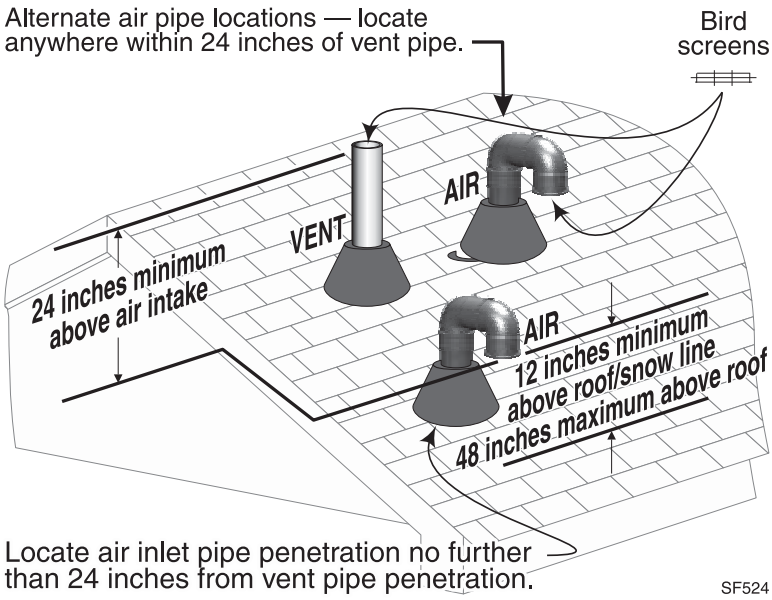

Figure 40 Termination location — multiple boilers — vent and air piping vertical.

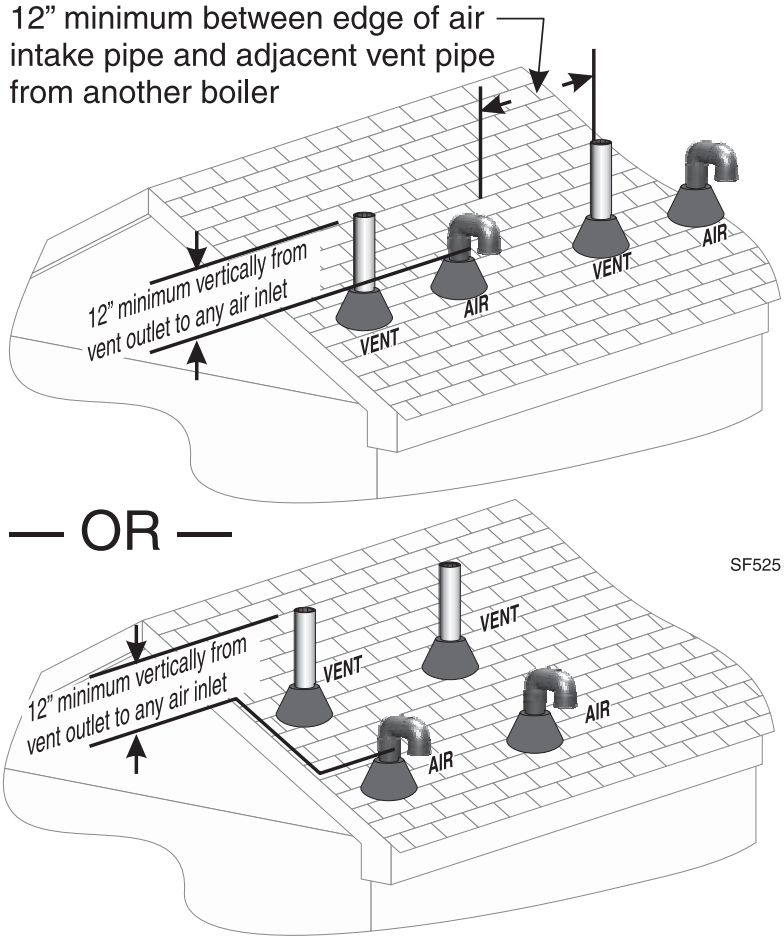

DIRECT VENT — Vertical *(continued)* (Category IV)

Figure 41 Termination location — multiple boilers — vertical vent/sidewall air.

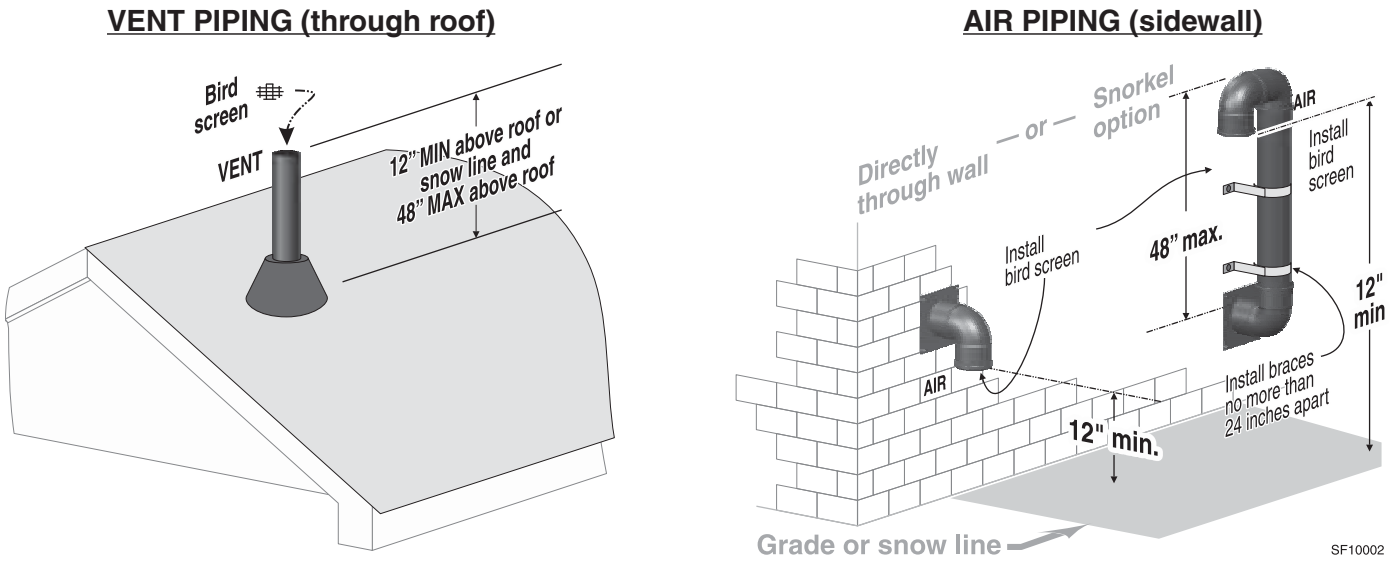

WARNING **Multiple boiler applications** — Space vents minimum 6 inches apart. Space air terminations minimum 6 inches apart.

Figure 42 Sidewall air termination assembly — vertical vent with sidewall air.

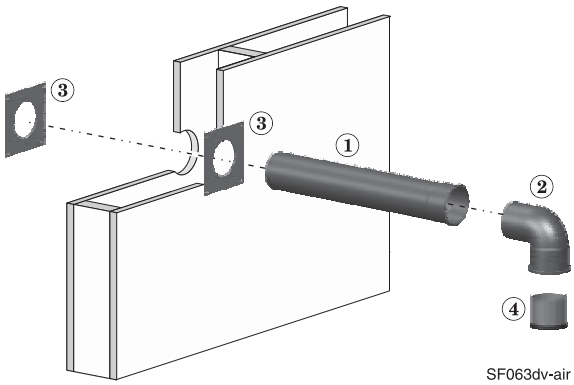

1. Air piping — must extend through wall enough for complete engagement of the air termination elbow.
2. Air termination elbow — must be down-turned 90-degree elbow.
3. Sidewall termination plates (hole must be just larger than the air pipe diameter).
4. Bird screen, by installer.

Figure 43 Direct venting — install tee on air inlet or provide means to disassemble the air piping to allow access to the inlet air filter.

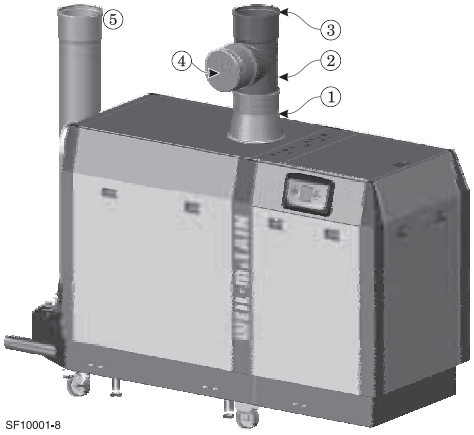

1. Vent/air pipe manufacturer's SlimFit Vent/Air Adapter, 8-inch outlet.
2. Vent/air pipe manufacturer's tee, 8-inch — orient the tee so the cover will be on the same side as the boiler heat exchanger cleanout cover.
3. Air pipe connection, 8-inch — add vent/air pipe manufacturer's reducer if using 6-inch air piping.
4. Vent/air pipe manufacturer's cover, 8-inch.
5. Vent piping (a vent/air pipe manufacturer's SlimFit Vent/Air Adapter must be installed at the boiler vent connection).

Use only the vent/air piping materials listed in Figure 22, page 25.

Install condensate components

Assemble condensate trap

1. Remove condensate trap parts from the trim bag.
2. See Figure 44. Slip the flexible coupling (item 4) over the trap outlet as shown.
3. Slide the two hose clamps over the flexible coupling.
4. Tighten one clamp to secure the coupling to the condensate trap.
5. Tighten the other clamp just enough to keep it in place on the flexible coupling until the condensate line has been installed.

Install the condensate trap

1. See Figure 45.
2. Insert the condensate trap inlet gasket (Figure 44, item 6) into the inlet ferrule (Figure 44, item 2).
3. Slide the condensate trap inlet over the boiler condensate outlet, located at the lower front center of the boiler.
4. Tighten the ferrule securely by hand.
5. Rotate the condensate trap support leg (Figure 44, item 3) to extend the support leg down until it touches the floor and the trap is level.

Connect condensate line

1. Use 1" PVC or CPVC pipe to route condensate to a drain or condensate pump.

NOTICE Use materials approved by the authority having jurisdiction. In the absence of other authority, PVC and CPVC pipe must comply with ASTM D1785, F441 or D2665. Cement and primer must comply with ASTM D2564 or F493. For Canada, use CSA or ULC certified PVC or CPVC pipe, fittings and cement.

2. If installing a condensate pump, select one approved for use with condensing boilers and furnaces. The pump should have an overflow switch to prevent property damage from condensate spillage. See Figure 46 for required flow capacity. Provide an external power source for the condensate pump.
3. When sizing condensate pumps, make sure to include the total load of all SlimFit boilers connected.

⚠WARNING The condensate line must remain unobstructed, allowing free flow of condensate. If condensate is allowed to freeze in the line or if the line is obstructed in any other manor, condensate can back up into the boiler, eventually leading to boiler lockout.

NOTICE Condensate from the SlimFit boiler will be slightly acidic (typically with a pH from 3.2 to 4.5). Install a neutralizing filter if required by local codes. See Replacement parts section at the end of this manual for a Weil-McLain condensate neutralizer kit.

Figure 46 Condensate pump capacity, GPH

Minimum recommended condensate pump capacity per boiler, GPH	
SF1000	27
SF1500	40
SF2000	54

Figure 44 Condensate trap assembly

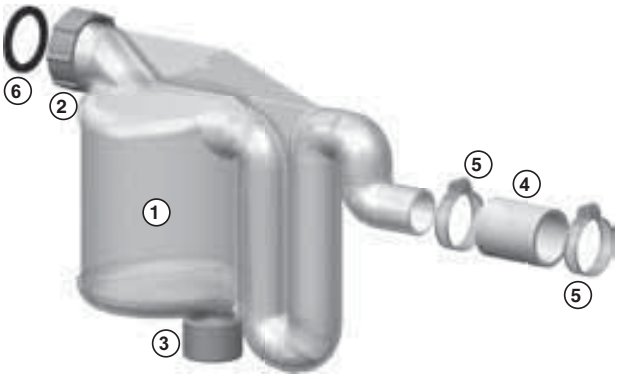

1. Condensate trap body.
2. Condensate trap inlet connection.
3. Adjustable support foot.
4. Flexible coupling on trap outlet connection (for use with 1-inch PVC or CPVC pipe).
5. Hose clamps (2).
6. Condensate trap inlet gasket.

Figure 45 Condensate trap assembly, installed

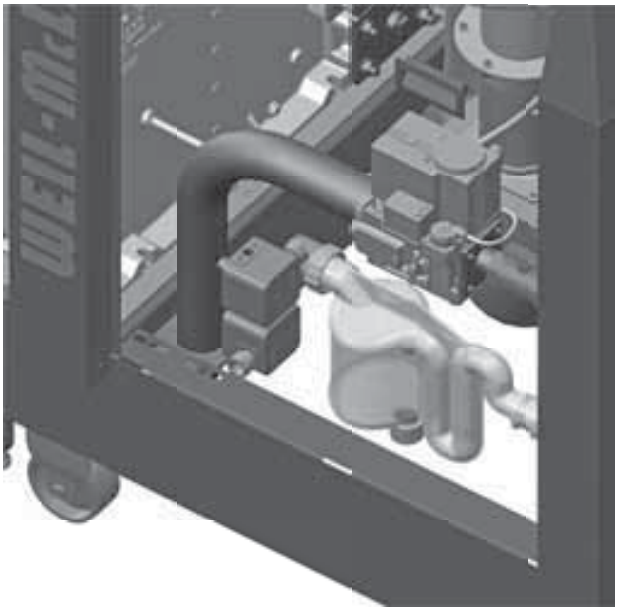

Gas piping

⚠WARNING **DO NOT connect the SlimFit boiler to a propane supply**. The boiler is suitable for firing ONLY natural gas. Failure to comply could result in severe personal injury, death or substantial property damage.

Connecting gas supply piping

1. See Figure 47.
2. Connect gas supply piping to the boiler.
   a. Install a union for servicing, when required.
   b. Install a manual shutoff valve in the gas supply piping, within 6 feet of the boiler.
   c. In Canada, the manual gas valve must be identified by the installer.
3. Support gas piping with hangers or other devices, not by the boiler or its accessories.
4. Use pipe dope compatible with propane gases (because natural gas may contain some propane). Apply sparingly only to male threads of pipe joints so that pipe dope does not block gas flow.

⚠WARNING Failure to apply pipe dope as detailed above can result in severe personal injury, death or substantial property damage.

⚠WARNING Install a 100% lockup gas pressure regulator in the gas supply line if inlet pressure can exceed 14" w.c. at any time. Adjust the lockup regulator for 7 to 10" w.c. static inlet pressure. This setting provides a cushion below the setting of the high gas pressure switch. Failure to comply could result in shutdown by the high gas pressure switch, resulting in possible serious property damage due to freeze-up.

Check gas supply

1. Purge all air from the gas supply piping.
2. Before placing the boiler in operation, check the boiler and its gas connection for leaks.
   a. Close manual main shutoff valve during any pressure testing at less than 20" w.c.
   b. Disconnect the boiler gas connection from the gas supply piping during any pressure testing greater than 20" w.c.

⚠WARNING Do not check for gas leaks with an open flame — use a soapy water bubble test. Failure to eliminate gas leaks can cause severe personal injury, death or substantial property damage.

Check gas supply pressure

1. See Figure 48. Connect a manometer or pressure gauge to the ⅛-inch Port 2 on the side of the gas valve (available on both sides of valve).
2. The pressure required at gas valve inlet pressure port (verify minimum gas pressure when all gas appliances are in operation):
   a. Minimum gas pressure, with gas flowing — 3" w.c. (76 mm) — verify during boiler startup, while boiler is at high fire.
   b. Maximum: certified to 14" w.c. (355 mm) with no flow (lockup) or with boiler on. Set the supply gas pressure regulator so the supply pressure is far enough below 14" w.c. to ensure that varying pressure conditions won't trip the high gas pressure switch (set at 14" w.c.).

⚠WARNING **Use two wrenches when tightening gas piping at boiler**, using one wrench to prevent the boiler gas line connection from turning. Failure to support the boiler gas connection pipe to prevent it from turning could damage gas line components.

Figure 47 Connect gas supply piping (all fittings and gas valve supplied by installer)

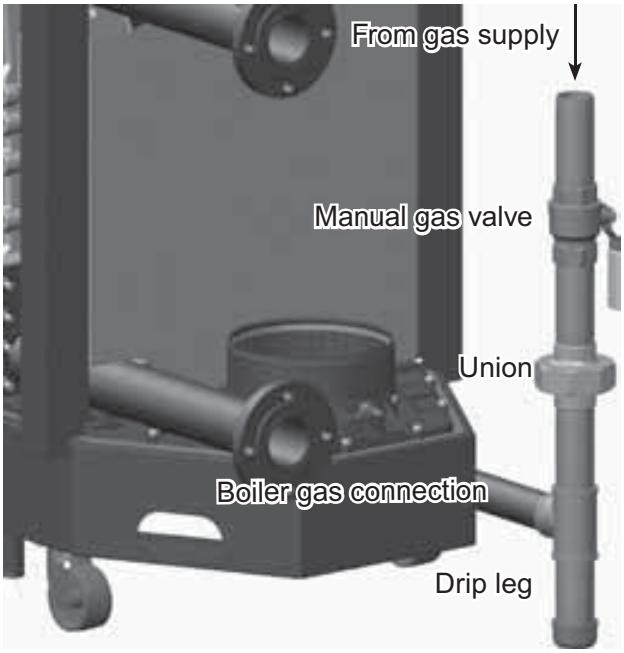

Figure 48 Gas valve inlet pressure tap (available on both sides of the gas valve)

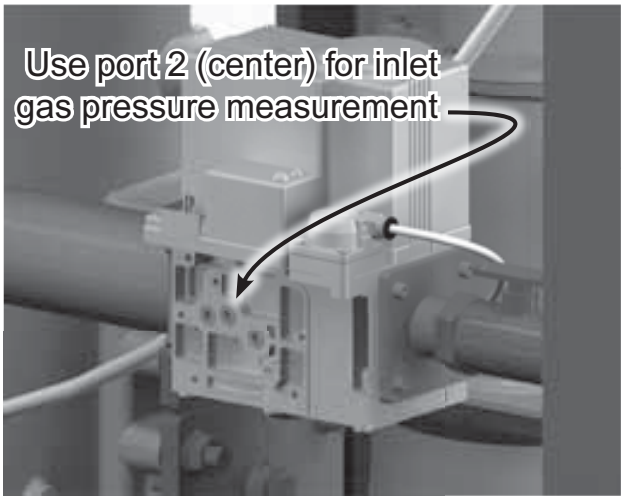

Gas piping *(continued)*

Pipe sizing

1. Size gas supply piping from meter outlet to entrance of boiler in accordance with Figure 49 and Figure 50.
2. Use the total input of all connected appliances. Divide the total input in Btuh by 1,000 to obtain approximate cubic feet per hour of natural gas.
   a. Pipe lengths in Figure 49 are equivalent lengths of straight pipe. Use Figure 50 to determine equivalent length of fittings.
   b. Figure 49 is only for natural gas with specific gravity 0.60, with a pressure drop through the gas piping of 0.30" w.c.
   c. For additional gas pipe sizing information, refer to ANSI Z223.1/NFPA54 -latest edition (or Natural Gas and Propane Installation Code - CAN/CSA B149.1 for Canadian installations).

Multiple boiler applications — manifolded gas supply lines

1. Size gas supply piping as instructed above.
2. At each boiler, provide a manual shutoff gas valve, union and sediment trap (minimum 3 inches below tee) as shown in Figure 47, page 45.
3. Ensure the piping is large enough so that the minimum pressure at each boiler, with all connected appliances firing, will be as specified on page 45.

Gas pressure switches

1. SlimFit boilers are equipped with manual reset high gas pressure and low gas pressure switches (see Figure 48, page 45).
2. These switches are factory set and should remain at the following settings:
   a. High gas pressure: 14 inches w.c.
   b. Low gas pressure: 2 inches w.c.

NOTICE The low gas pressure switch must be manually reset (button on front of switch) on initial startup or any time the gas supply is turned off.

Figure 49 Pipe capacity for natural gas

Gas pipe total length (feet)	Gas supply pipe capacity (cubic feet per hour) @ 0.30" w.c. pressure drop (cubic feet per hour, 0.60 specific gravity)				
	1½"	2"	2½"	3"	4"
10	1600	3050	4800	8500	17500
20	1100	2100	3300	5900	12000
30	890	1650	2700	4700	9700
40	760	1450	2300	4100	8300
50	670	1270	2000	3600	7400
70	560	1050	1700	3000	6200
100	460	870	1400	2500	5100
150	380	710	1130	2000	4100

Figure 50 Equivalent lengths of straight pipe for gas line fittings

Pipe size inches	Equivalent length, feet	
	90° Elbow	Tee
1½	4.02	8.04
2	5.17	10.3
2½	6.16	12.3
3	7.67	15.3
4	10.1	20.2

Gas Train Diagram

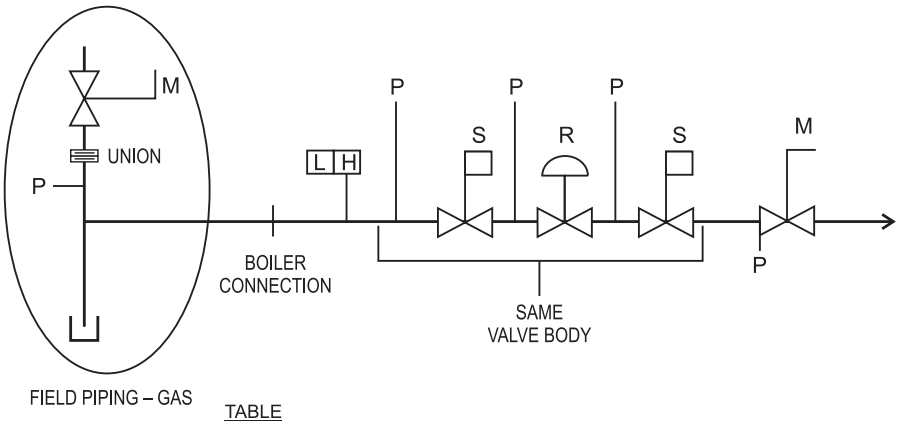

TABLE

S = SAFETY SHUT–OFF VALVE
R = ZERO GOVERNOR REGULATOR
M = MANUAL SHUT–OFF VALVE
L = LOW GAS PRESSURE SWITCH
H = HIGH GAS PRESSURE SWITCH
P = PRESSURE TAP

Field wiring (see Figure 52 & Figure 53)

WARNING **ELECTRICAL SHOCK HAZARD** — For your safety, turn off electrical power supply at service entrance panel before making any electrical connections to avoid possible electric shock hazard. Failure to do so can cause severe personal injury or death.

NOTICE The installation must comply with: National Electrical Code and any other national, state, provincial or local codes or regulations. In Canada, CSA C22.1 Canadian Electrical Code Part 1, and any local codes.

NOTICE Wiring must be N.E.C. Class 1. If original wiring as supplied with boiler must be replaced, use only type 105 °C wire or equivalent. Boiler must be electrically grounded as required by National Electrical Code ANSI/NFPA 70 – latest edition, and/or the Canadian Electrical Code Part I, CSA C22.1, Electrical Code.

NOTICE The boiler when installed, must be electrically bonded to ground in accordance with the requirements of the authority having jurisdiction or, in the absence of such requirements, with the National Electrical Code, ANSI/NFPA 70 – latest edition, and/or the Canadian Electrical Code Part I, CSA C22.1, Electrical Code.

NOTICE Do not use 24V from transformer to power any external devices that are not listed in this manual.

Wire entrances

Eight knockouts are provided in the top of the cabinet for line and low voltage wiring. See Figure 51 for locations.

WARNING

Installer MUST use a strain relief through jacket knockouts. Failure to do so can cause severe personal injury, death or substantial property damage.

Figure 51 Wiring entrances

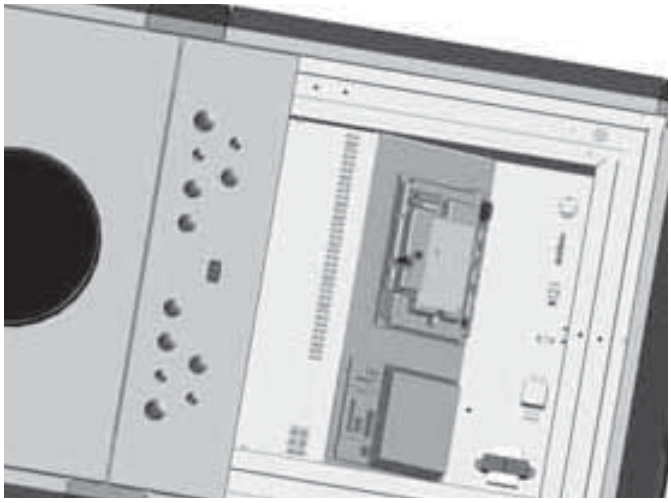

Wiring overview

See details on the following pages for the wiring connections outlined below:

Required wiring connections

- 120VAC power to boiler; 120VAC power out to boiler circulator; system supply and return temperature sensors.

Connections as needed by systems

- Thermostat, end switch or other inputs for call for heat.
- System zone circulators, valves, relays, etc.
- System circulator, when required.
- Outdoor temperature sensor.

Optional wiring connections

- External limits; Closure switch interlocks (combustion air damper, flow switch, etc.); 0–10VDC for target or modulation control; remote alarm; additional heat demand contact; and communication cables for boiler networking and/or building management system interface (MODBUS).

Line voltage power input

1. Boiler line voltage power — Boiler load: SF1000 — 12.1 Amps; SF1500 — 20.7 Amps; SF2000 — 23.2 Amps. Provide and install a fused disconnect or service switch as required by applicable codes. Fuse or breaker rating must be sized accordingly.
2. Boiler Circ activation circuit — Provide external power for pump's, 120 VAC/1-phase, size as required for the pump load. Interrupt pump's hot line with the connections on EP7 screw terminal. Maximum current rating of relay is 10 Amps.

Continued after page 52

Field wiring Schematic Diagram *(continued)*

Figure 52 Schematic wiring diagram — SlimFit boilers (continued on next page)

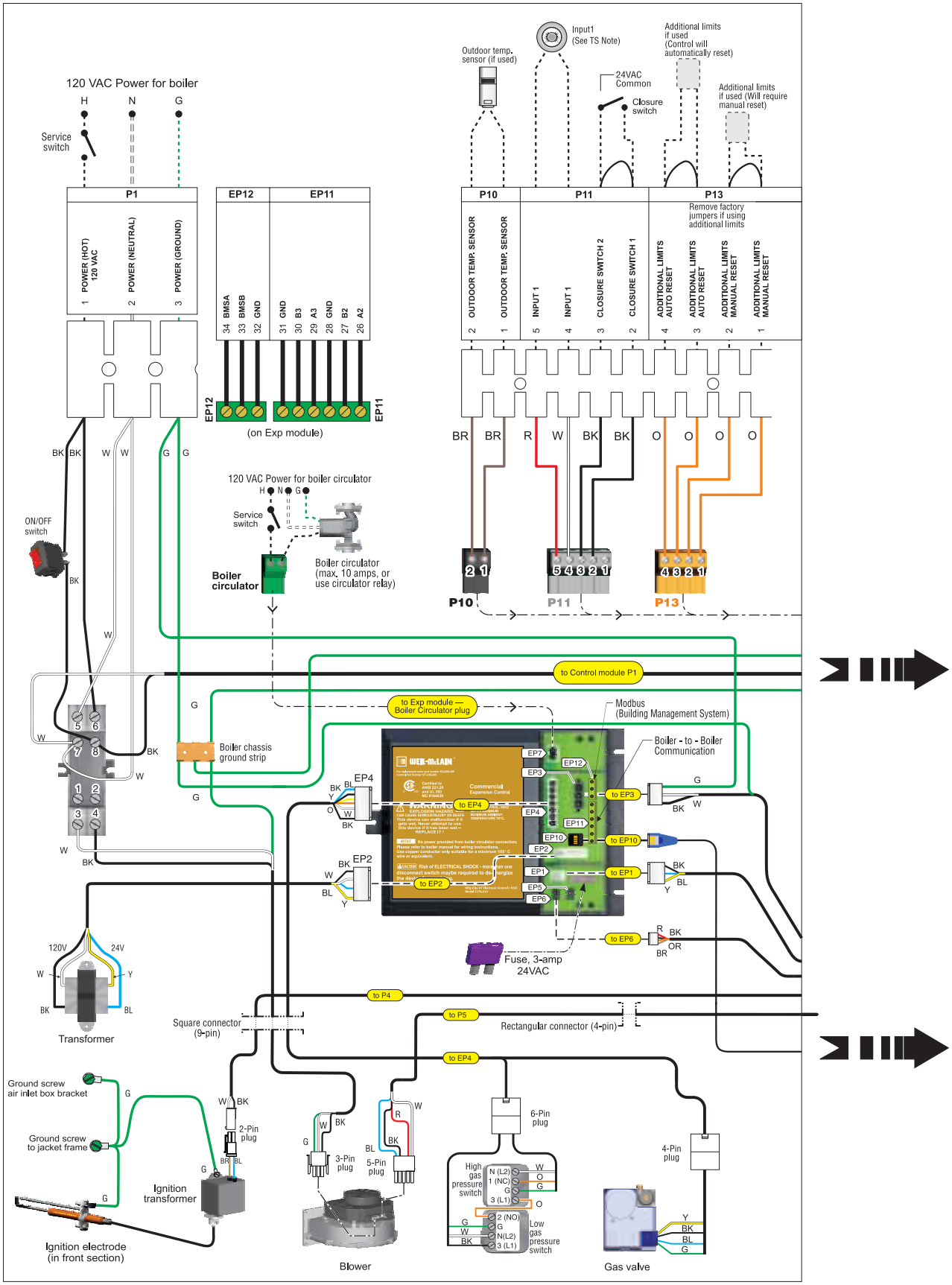

Field wiring Schematic Diagram *(continued)*

Figure 57 (continued from previous page) Schematic wiring diagram — SlimFit boilers

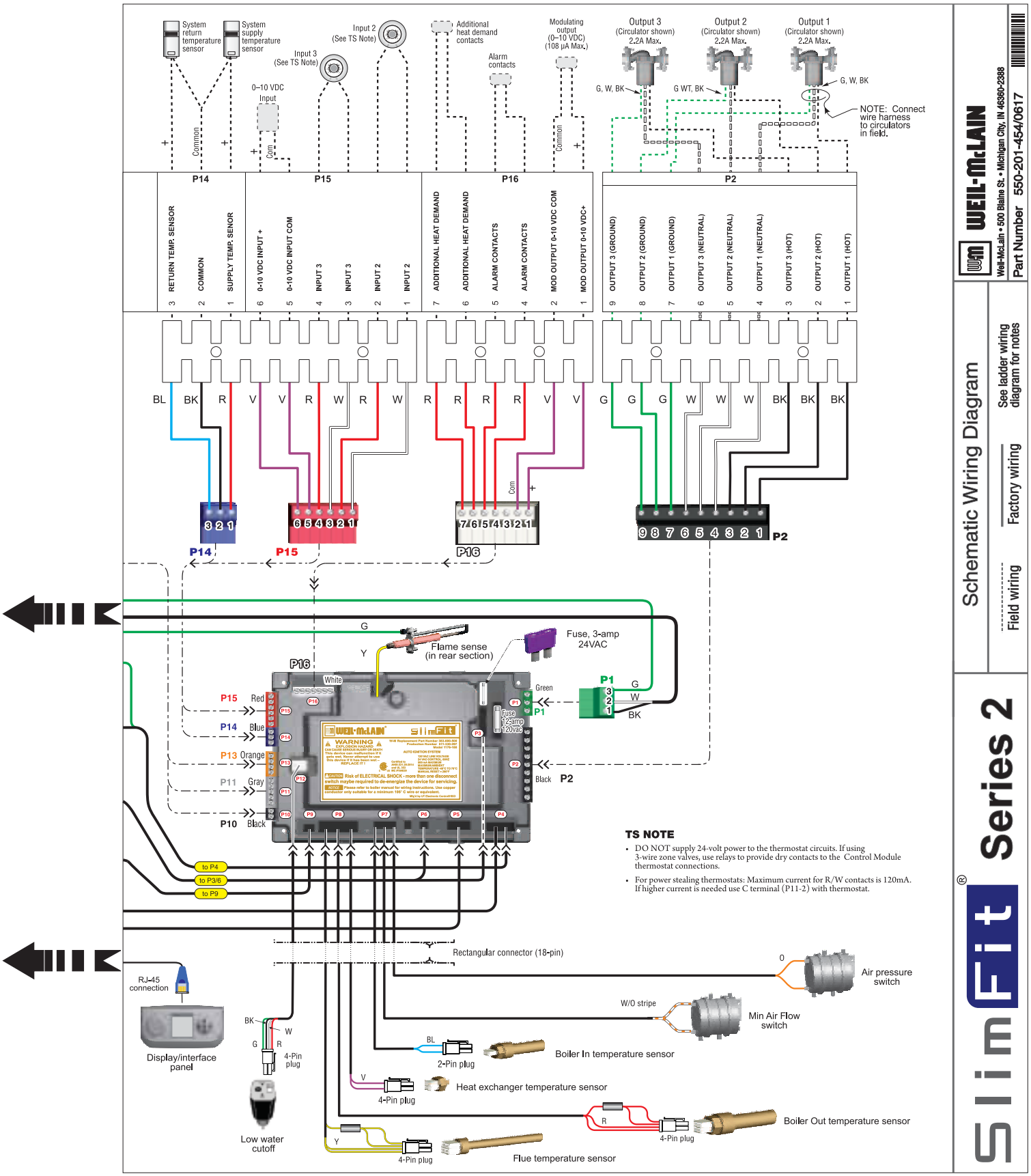

Field wiring Ladder Diagram *(continued)*

Figure 53 Ladder wiring diagram — SlimFit boilers (continued on next page)

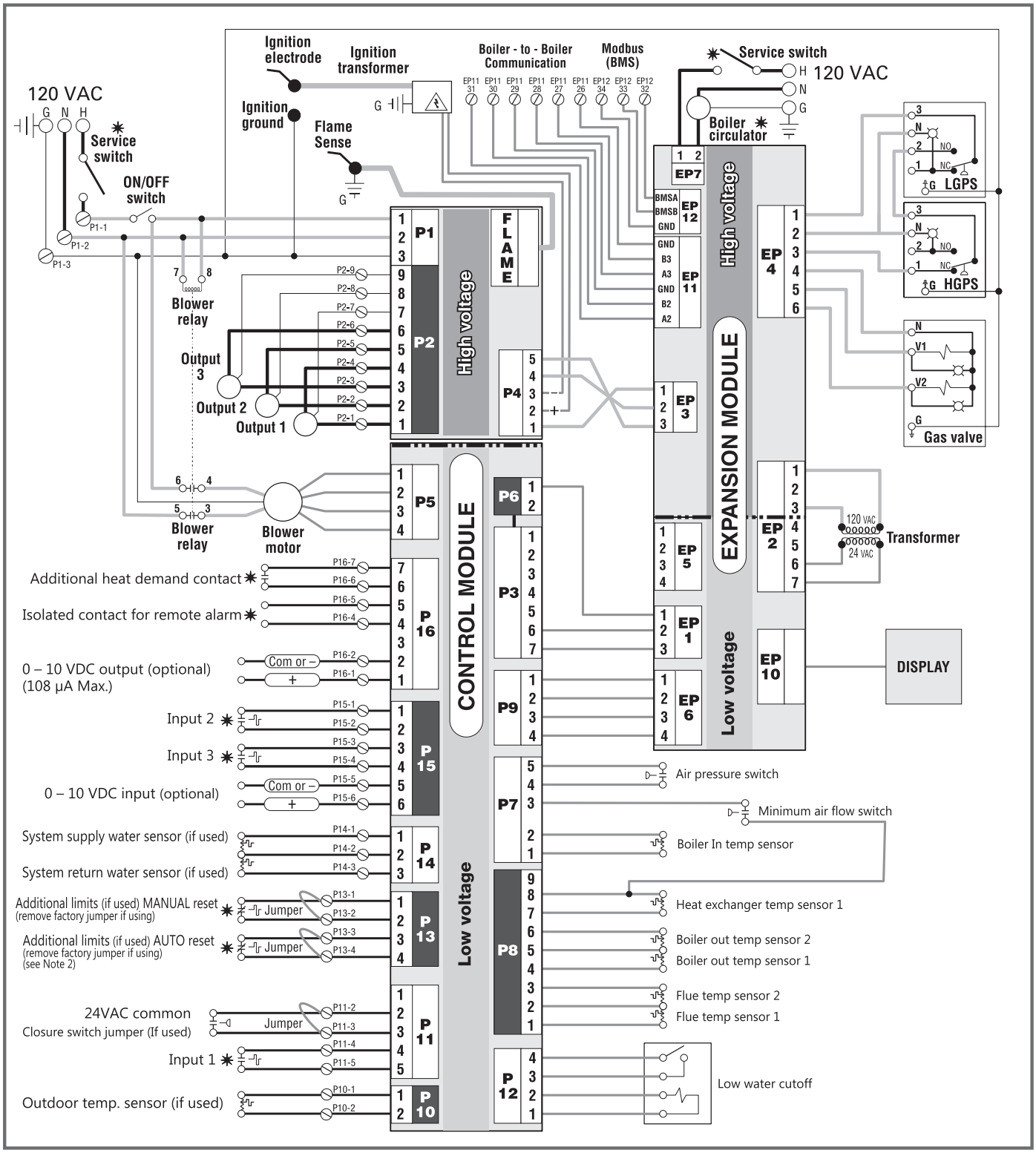

Field wiring Ladder Diagram *(continued)*

Figure 53 (continued from previous page) Ladder wiring diagram — SlimFit boilers

SlimFit®

Series 2
Ladder Wiring Diagram

⚠WARNING

Electrical shock hazard — can cause severe injury or death. Disconnect power before installing or servicing.

NOTICE

All contacts shown without power applied.

✷ Indicates items not provided

Legend for ladder wiring diagram only

- 120 vac field wiring
- Low voltage field wiring
- 120 vac factory wiring
- Low voltage factory wiring
- High voltage spark ignition wiring
- Ground connectors

Notes for Schematic and Ladder Diagrams

1. All wiring must be installed in accordance with:
   U.S.A. — N.E.C. And any other national, state, or local code requirements.
   Canada — C.S.A. C22.1 C.E.C. Part 1 and any other national, provincial, or local code requirements.
2. Connect additional limits (if used) between terminals P13-1 and P13-2 if the boiler control module is to manual reset on limit action. Connect between terminals P13-3 and P13-4 for automatic reset. Remove jumper across terminals used.
3. If any of the original wire as supplied with the appliance must be replaced, use minimum 105 °C wire or equivalent. Exceptions: Ignition lead wire must be obtained from Weil-McLain only.
4. Thermostat anticipator setting (single zone) — set anticipator for 0.1 amps.
5. For multiple zoning, use either zone valves or circulators. Refer to the component manufacturer's instructions and this manual for application and wiring suggestions. Boiler circulator must remain with boiler, and cannot be used for system circulation in any way.
6. Refer to control component instructions packed with the boiler for application information.
7. Provide power source to boiler that is protected by a surge protector. Amperage requirements for boilers are:
   SF1000 — 12.1 amps
   SF1500 — 20.7 amps
   SF2000 — 23.2 amps
   Fuse or breaker rating must be sized accordingly.

WEIL-McLAIN
Weil-McLain • 500 Blaine St. • Michigan City, IN 46360-2388

Part Number 550-201-455/0617

Field wiring (see Figure 52 & Figure 53) *(continued)*

A. 120 VAC Power Supply – REQUIRED

Terminal Block P1

1. Boiler line voltage power — Boiler loads are listed below. Provide and install a fused disconnect or service switch as required by applicable codes.
2. Connect properly sized **120 VAC** power wiring to **SlimFit** boiler line voltage terminal strip as shown at right.
3. If possible, provide a surge suppressor in the supply power line. This will reduce the possibilities of control damage due to line surges.
4. Must wire ground to this terminal to provide boiler grounding.

SF1000 — 12.1 amps;
SF1500 — 20.7 amps;
SF2000 — 23.2 amps

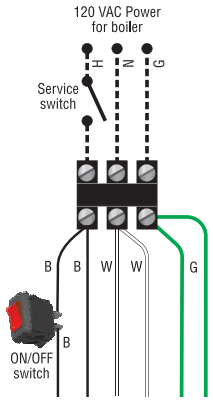

See Figure 52, page 48 for details

B. 120 VAC Outputs 1, 2 & 3 – *On each boiler – As needed for systems*

Terminal Strip P2

1. Output 1: P2 Terminals 1 (H), 4 (N), 7 (G).
2. Output 2: P2 Terminals 2 (H), 5 (N), 8 (G).
3. Output 3: P2 Terminals 3 (H), 6 (N), 9 (G).
4. Maximum load: 2.2 amps (use relay if circulator load is higher). See WARNING below.
5. Each boiler has three outputs (Output 1, Output 2, and Output 3) that provide 120 VAC to the following listed below.
   - A zone circulator.
   - A system circulator.
   - A DHW circulator (used to circulate through an indirect tank).
   - An auxiliary item that must be energized during an input call, such as an air damper.
6. When using inputs/outputs for heat/DHW demands, each input (Input 1, Input 2, and Input 3) controls its respective 120 VAC output (Output 1, Output 2, and Output 3). Outputs are energized only when BOTH conditions below are met:
   a. The corresponding input indicates a call for heat/DHW (i.e., contact closure).
   b. The PRIORITY assigned to the Input/Output pair is ACTIVE (i.e., the zone may be calling but the pump won't activate unless the boiler is currently running on that system/priority).
7. When using the inputs/outputs for the AUX PUMP/OUTPUT function, the output is controlled by selectable conditions set up in the control.
   a. Use the AUX PUMP/OUTPUT function for devices such as system pumps, combustion air dampers, and other auxiliary equipment to activate when the boiler is on/running.
   b. See page 71 and page 72 for more information on the setup and selection of operating conditions.

NOTICE **For Priority DHW Application:**
The DHW aquastat can be connected to any one of the three input/output pairs. The selected input should be assigned to PRIORITY 1 during the WIZARD setup or manually in the ASSIGN INPUTS menu.

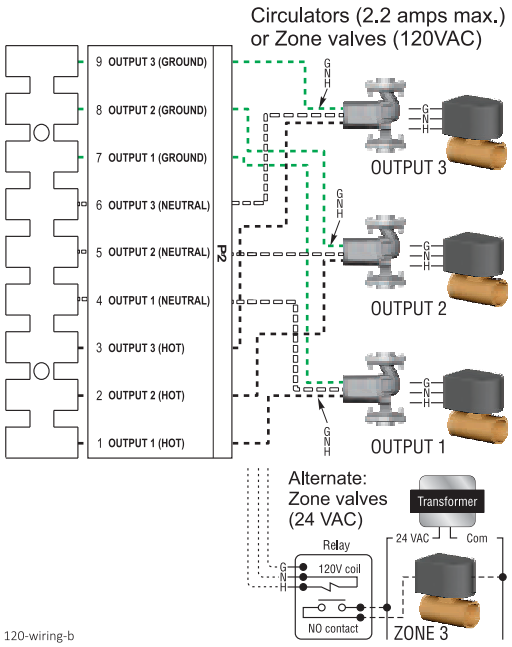

See Figure 52, page 48 for details

WARNING Output circuits are 120 VAC. If an output is to operate a low voltage circuit or must be an isolated contact, use an isolation relay. See example above for 24 VAC zone valves.

WARNING **CIRCULATOR POWER — The maximum allowable current for each circulator is 2.2 amps at 120 VAC.**

For circulators with higher amp ratings, install a circulator relay or starter. Connect only the 120 VAC coil to the **SlimFit** circulator terminals.

Field wiring (see Figure 52 & Figure 53) *(continued)*

C. 120 VAC to Boiler Circulator – *REQUIRED*

Terminal Strip EP7 (BOILER CIRC) *(Expansion module, top right)*

1. Provides 120 VAC Dry Contact for boiler circulator.
2. Terminals are: 1 (H), 2 (H).
3. Maximum load: 10 amps (use relay if circulator load is higher).
4. Provide and install a fused disconnect or service switch (15-ampere rated recommended) as required by applicable codes for circulator with maximum load of 10 amps.
5. The boiler circulator is used in the boiler loop of the primary / secondary piping. Primary / secondary piping is recommended to be used with the **SlimFit** boiler to ensure proper flow through the heat exchanger.

NOTICE Other designed piping arrangements will work as long as water flow requirements are met from page 15, contact your local Weil-McLain commercial representative for assistance.

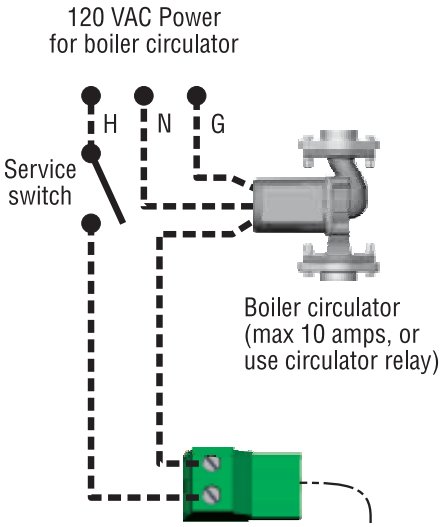

See Figure 52, page 48 for details

D. 24 VAC Inputs 1, 2 and 3 (tstats, end switches, etc.) – *As needed for systems*

Terminal Strip P11 (input 1) & Terminal Strip P15 (inputs 2 & 3)

1. Input 1 – Terminal Strip P11 – 4 & 5 (SlimFit terminal bus).
2. Input 2 – Terminal Strip P15 – 1 & 2 (SlimFit terminal bus).
3. Input 3 – Terminal Strip P15 – 3 & 4 (SlimFit terminal bus).
4. These three inputs on each boiler can indicate a call for heat to the control by means of a dry contact closure (thermostat, aquastat, or switch). (See right and Figure 52, page 48).
5. The control provides inputs for up to three zones or three systems (priorities).

NOTICE The control default setting is for three space heating zones tied to PRIORITY 2, which is defaulted to FINNED TUBE BASEBOARD system type.

6. For DHW applications, the aquastat can be connected to one of the three input/output pairs. Take advantage of factory default settings by using PRIORITY 1 for the DHW system. The default control setting for PRIORITY 1 is a direct-piped DHW system type.
7. The default control setting uses each input (INPUT 1, INPUT 2, and INPUT 3) to control its respective 120VAC output (OUTPUT 1, OUTPUT 2, and OUTPUT 3).

NOTICE Use of 0–10VDC input for modulation disables Input 1 from creating calls for heat. See page 58 for instructions.

An input can be assigned to an AUX PUMP/OUTPUT function to operate a system pump or interlock with a combustion air damper. Inputs assigned for this function cannot be used for heat demand operation. See page 71 and page 72 for more information on the setup and selection of operating conditions.

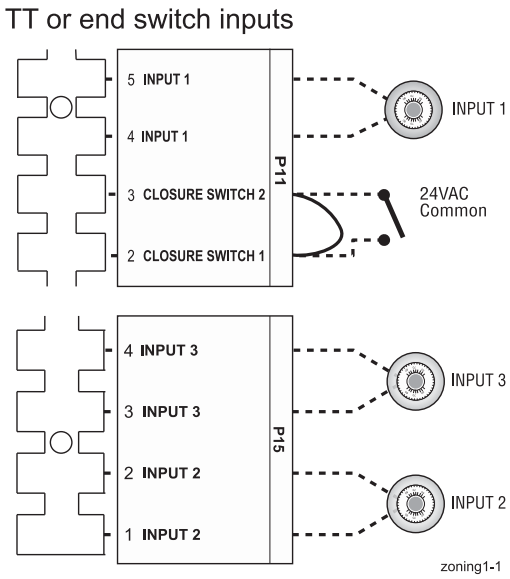

See Figure 52, page 48 for details

⚠WARNING **Thermostats** — **DO NOT** supply 24-volt power to the thermostat circuits (Input1, Input2 and Input3 in Figure 52, page 48) or attempt to supply 24 volts for any other application.

For thermostats that require a continuous 24-volt power source, connect the common wire ("C") to **P11** Pin 2 (see Figure 52, page 48). Do NOT exceed total amp draw per thermostat.

Zone valves — If using 3-wire zone valves, use relays to provide dry contacts to the Control thermostat connections. The zone valve end switches of 3-wire valves carry 24 VAC from the valve.

Thermostat anticipator setting — 0.1 amps.

Field wiring (see Figure 52 & Figure 53) *(continued)*

E. System supply and return temperature sensors – *REQUIRED*

Terminal Block P14 #1 & #2

1. Two strap-on temperature sensors are shipped with each boiler. Attach one to the system supply piping and the other to the system return piping. For piping larger than 5 inch diameter or nonmetallic piping, using immersion sensors will provide faster response. See **SlimFit** boiler manual replacement parts section for available immersion sensors.
2. Locate the supply sensor at least six pipe diameters, but no further than 3 feet, downstream from the boiler connection to the main to ensure adequate mixing.
3. Supply sensor – wire between P14 #1 and #2 (common).
4. Return sensor – wire between P14 #3 and #2 (common).
5. Thermostat wire can be used to connect these sensors.
6. The Control compares the system return temperature with the system supply temperature. Should the return temperature ever exceed the supply temperature, the Control knows there is likely a sensor failure and will report this problem on the display.

NOTICE All heating systems shown in this manual require the System Supply and Return sensors to be installed for proper control function. System will not properly provide heat if sensors are not installed according to these instructions.

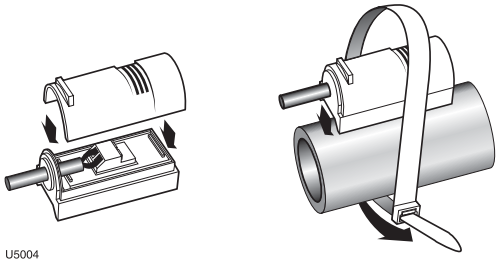

Strap to supply & return piping

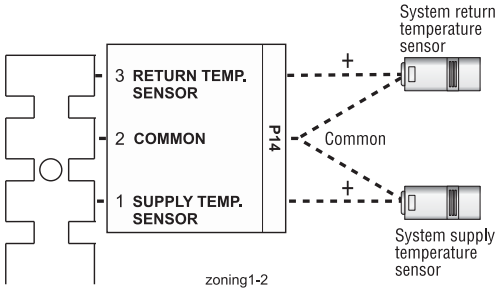

See Figure 52, page 48 for details

F. *Outdoor temperature sensor – OPTIONAL*

Terminal Block P10 #1 & #2

1. The control provides programmable options if using an outdoor temperature sensor. This sensor is supplied with the boiler.
2. Mount the outdoor sensor on an exterior wall, shielded from direct sunlight or flow of heat or cooling from other sources.
3. The wire outlet on the sensor must be oriented DOWN to prevent water entry.
4. Connect the sensor leads to the terminal shown at right and in the wiring diagrams (see Figure 52, page 48). Thermostat wire can be used to connect the sensor.

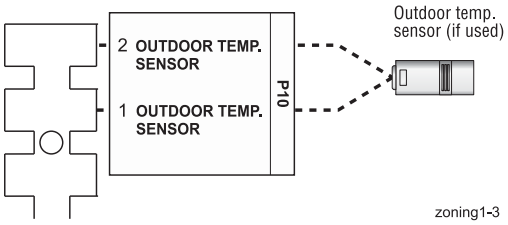

See Figure 52, page 48 for details

Field wiring (see Figure 52 & Figure 53) *(continued)*

G. External limits – OPTIONAL

To cause **MANUAL** reset: Terminal Block P13 #1 & #2

SlimFit control will require manual reset after circuit is interrupted

1. Remove factory-installed jumper and connect isolated contacts of external limits across P13 pins 1 and 2 to cause the control to enter manual reset lockout if the limit circuit opens. The limit must close and the control must be manually reset using the procedure given in this manual. See drawing at right and wiring diagram (Figure 52, page 48).

NOTICE The control will lockout when a limit in its manual reset circuit opens (P13 pins 1 & 2). The control activates its alarm terminals and shuts the boiler off. An operator (user or technician) must manually reset the control to resume heating. Cycling power on and off will NOT reset the control.

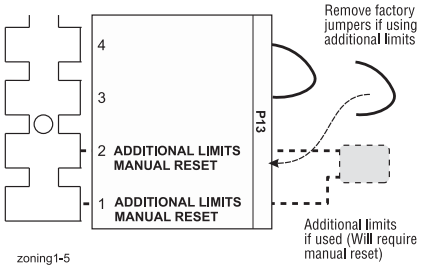

See Figure 52, page 48 for details

To cause **AUTOMATIC** reset: Terminal Block P13 #3 & #4

SlimFit control will reset automatically after circuit is interrupted

1. Remove factory-installed jumper and connect isolated contacts of external limits across P13 pins 3 and 4 to cause the control to shut down the burner on limit opening, then automatically restart 150 seconds after the limit closes.
2. See drawing at right and wiring diagram (Figure 52, page 48).

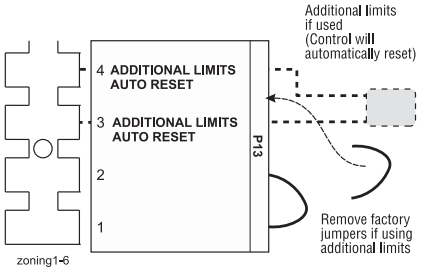

See Figure 52, page 48 for details

H. Alarm contacts – OPTIONAL

Terminal Block P16 #4 & #5

1. The control's alarm dry contact (P16, terminals 4 and 5) closes when the boiler enters manual lockout only.
2. Connect these terminals for remote alarm notification.
3. Contact electrical ratings: 24 VAC or less; 0.5 amp or less.

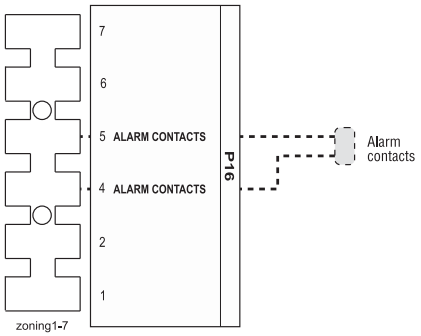

See Figure 52, page 48 for details

Field wiring (see Figure 52 & Figure 53) *(continued)*

I. Closure switch (flow switch and/or CAD) – OPTIONAL

Jumper on Terminal Strip P11

1. A flow switch or combustion air damper (CAD) interlock can be configured by removing jumper.
2. No control settings are required when using a flow switch.
3. Recommended configuration of the SlimFit control for a CAD interlock:
   a. Assign **INPUT 3** as a **AUX PUMP/ OUTPUT** function.
   b. For the **AUX PUMP/OUTPUT** operating mode, select **ANY BURNER DEMAND**. This ensures the damper will be activated any time the boiler is called on to fire.
   c. **OUTPUT 3** will provide 120VAC to the damper motor. Use an isolation relay if damper motor requires another voltage or more than 2.2 amp if using 120 VAC.

NOTICE * The devices used must provide electrically isolated contacts, because the P7 jumper circuit carries 5 VDC.

4. When a call for heat occurs, the corresponding output(s) energize, and the blower does not activate until the closure switch is made. The boiler is given four (4) minutes to make the closure switch. If the switch opens prior to ignition, the timer continues with the blower remaining active. After four (4) minutes, if the closure switch is not made, or if the closure switch opens during burner firing, the control locks out. The fault will clear when the closure switch makes. The corresponding output(s) will remain energized in an attempt to close the switch.

Flow switch and/or combustion air damper

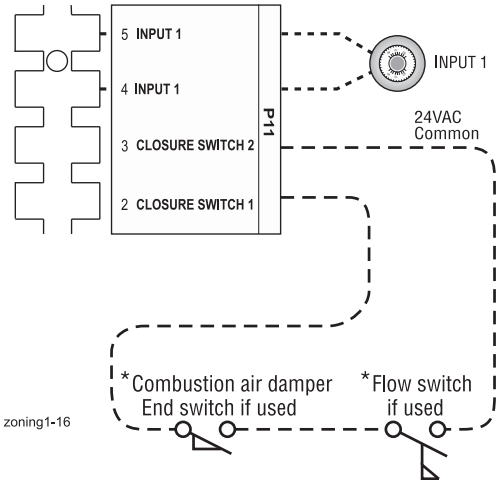

See Figure 52, page 48 for details

Field wiring (see Figure 52 & Figure 53) *(continued)*

J. 0 –10 VDC Remote TARGET input – OPTIONAL

Terminal Block P15 #5 & #6

1. See illustration at right and Figure 52, page 48 (wiring diagram) for details.
2. Remote target using 0–10VDC input requires a 0–10VDC input signal at P15-4/5 as shown at right.
   a. The input positive connection must be at P15 terminal 6 and the common connection at terminal 5.
3. This illustration also shows how to connect TT or end switch contacts at INPUT 1, INPUT 2 and INPUT 3.
   a. If a Heat/DHW demand is required, connect the demand's dry contact to an unused input on the control and its pump/valve to the respective output. Then assign and setup a priority to the input using the Wizard or manually through the contractor menu.
   b. A dry contact heat demand must be applied to one of the inputs in order to initiate a call for heat.
4. The 0–10VDC signal is used to adjust the supply target temperature, using the TARGET ADJUST setting. Set TARGET ADJUST during the WIZARD or manually in the PRIORITY SETTINGS menu for the desired PRIORITY.
   a. Many options are available for configuring the control. The following is a suggested setup that uses factory default settings as much as possible.
   b. Use PRIORITY 1 for the DHW heating system when used. This priority's default values are set for DHW, direct-piped to the boiler. Verify that settings are suitable for the application, change if needed.
   c. Use PRIORITY 2 for the heating systems.
      - For single boilers, the factory default settings for PRIORITY 2 make this priority a good choice for space heating applications. Set PRIORITY 2 values to the following:
      - Set TARGET ADJUST value to 0–10V.
      - Set VOLTS FOR MAX at the voltage that will call for the highest target temperature. Set SUPPLY MAX at this temperature.
      - Set VOLTS FOR MIN at the voltage that will call for the lowest target temperature. Set SUPPLY MIN at this temperature.
      - For voltages between VOLTS FOR MAX and VOLTS FOR MIN, the target temperature will range proportionately between SUPPLY MAX and SUPPLY MIN. See the SlimFit Advanced Manual for a full discussion.

NOTE: The 0–10VDC signal replaces the ODT sensor as the target temperature modifier (TARGET ADJUST setting). The control does not control target.

TT or end switch inputs
(INPUTS 1, 2, and 3)
With External 0–10VDC input

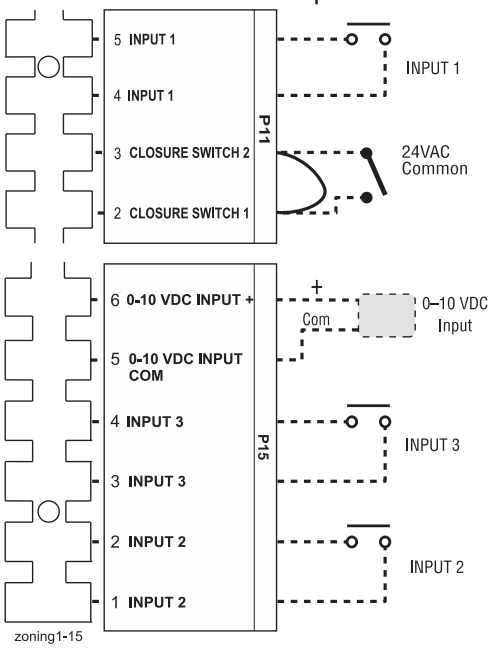

See Figure 52, page 48 for details

Field wiring (see Figure 52 & Figure 53) *(continued)*

K. 0–10 VDC Remote MODULATION input – OPTIONAL

Terminal Block P15 #5 & #6 *(SlimFit control module, left side)*

WARNING **Using an external multiple boiler controller** — Remote modulation using an external controller only works with each boiler set up as a SINGLE boiler in the SlimFit Control setup.

1. See illustration at right and Figure 52, page 48 for details.
2. This illustration also shows how to connect TT or end switch contacts at INPUT 2 and INPUT 3 for other uses.
3. This function can only be used with a single boiler, NOT for a boiler in a network.
4. Note that using 0–10VDC input replaces INPUT 1 to generate a heat demand as shown at right.
5. Remote modulation requires a 0–10VDC input signal at P15-4/5 as shown at right.
   a. The 0–10VDC input positive connection must be at terminal 6 and common connection at terminal 5.
6. Control setup:
   a. Many options are available for configuring the control. The following is a suggested setup that uses factory default settings as much as possible.
   b. If DHW is required, use PRIORITY 1 to minimize setup steps.
      - Connect the DHW aquastat to INPUT 2 or INPUT 3 and assign the input used to PRIORITY 1.
      - Verify that control settings are suitable for the application, changing if necessary.
   c. Use PRIORITY 2 for the system to be remote modulated.
      - The factory default settings for this priority are best suited for space heating.
      - Assign INPUT 1 to the priority chosen. Accept all defaults for INPUT 1 — no changes should be necessary during the WIZARD.
      - After the WIZARD has been completed, go to the ASSIGN INPUTS menu for INPUT 1. Change SOURCE to 0–10V (default setting is TT1). See page 71 for ASSIGN INPUTS menu information.
7. Operation:
   a. A heat demand is activated at 0.9VDC and turns off at 0.8VDC. 2 VDC = 17% input. 10 VDC = 100% input. These voltage settings are not adjustable.
   b. OUTPUT 1 (120 VAC) is activated and deactivated as the heat demand is turned on and off. This output is a good choice to operate the system pump.
8. NOTE: The SlimFit control can be configured to use either 0–10VDC for target operation (see previous section) or modulation, **but not both**.

TT or end switch inputs (INPUTS 2 and 3)
With External 0–10VDC input

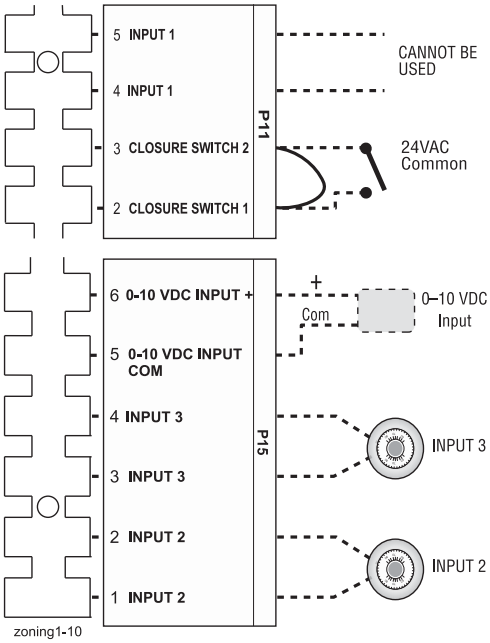

See Figure 52, page 48 for details

Field wiring (see Figure 52 & Figure 53) *(continued)*

L. Multiple Boiler and BMS Connections – see ADVANCED Manual

Terminal Strips EP11 and E P12 on Expansion Module *(Expansion module, right side)*

1. The boiler control is capable of multiple boiler communication and control of up to eight (8) boilers in one installation.
2. The boiler control is also capable of BMS communication.
3. See **SlimFit** Advanced Manual for multiple boiler installation and setup information.

See SlimFit Advanced Manual for details

M. Additional heat demand contacts – OPTIONAL

Terminal Block P16 Pins #6 & #7 *(SlimFit control module, top left)*

1. The control module can be set to activate another heat source using its additional heat demand dry contacts through terminal block P16 pins 6 & 7.
2. Connect these terminals to call for heat from the other heat source.
3. Contact electrical ratings: 24VAC or less; 0.5 amp or less.
4. Set the control to activate the heat demand contacts as needed.
5. See SlimFit Advanced Manual to configure.

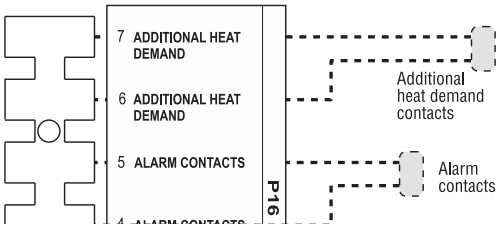

See Figure 52, page 48 for details

N. 0-10 VDC Output Section

Terminal Block P16 Pins #1 & #2 *(SlimFit control module, top left)*

1. The control module can be set to activate another heat source using its 0-10VDC Output through terminal block P16 pins 1 & 2.
2. Connect these terminals to 0-10VDC inputs on another heat source to control its modulation rate.
3. Maximum electrical ratings: 10VDC; 108µ A.
4. Set the control to activate the output as needed.
5. See SlimFit Advanced Manual to configure.

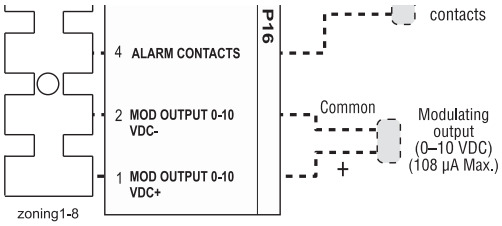

See Figure 52, page 48 for details

Zoning with the SlimFit Control

A. Zoning with CIRCULATORS, suggested applications

Three space heating zones (no DHW)

1. Review wiring information on page 49 (120VAC outputs) and page 53 (24VAC inputs).
2. The configuration at right uses the three input/output pairs to receive thermostat inputs on P11-4/5, P15-1/2, and P15-3/4; and circulator outputs on P2 as shown.
3. The factory default settings assign all inputs 1, 2 and 3 to PRIORITY 2.
4. Choose the space heating system type that matches the heating system during the WIZARD setup or manually in the PRIORITY 2 menu.
5. Use the factory default settings for the system type chosen, or change if needed.
6. Factory defaults should work for other settings not listed above.

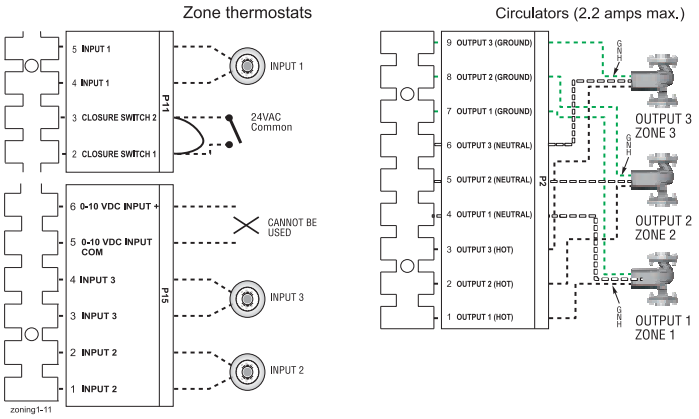

Two space heating zones plus DHW piped directly to boiler

1. Review wiring information on page 49 (120VAC outputs) and page 53 (24VAC inputs).
2. The configuration at right uses INPUT 2 and 3 for space heating thermostats. INPUT 1 uses the input from a DHW aquastat.
3. The factory default settings assign inputs 1, 2 and 3 to PRIORITY 2. Keep inputs 2 and 3 assigned to PRIORITY 2. To set up PRIORITY 2, choose the space heating system type that matches the heating system during the WIZARD setup or manually in the PRIORITY 2 menu.
4. Assign INPUT 1 to PRIORITY 1, which is factory default configured for DHW applications.
5. Use the factory default settings for DHW and for the heating system type chosen, or change if needed.
6. Factory defaults should work for other settings not listed above.

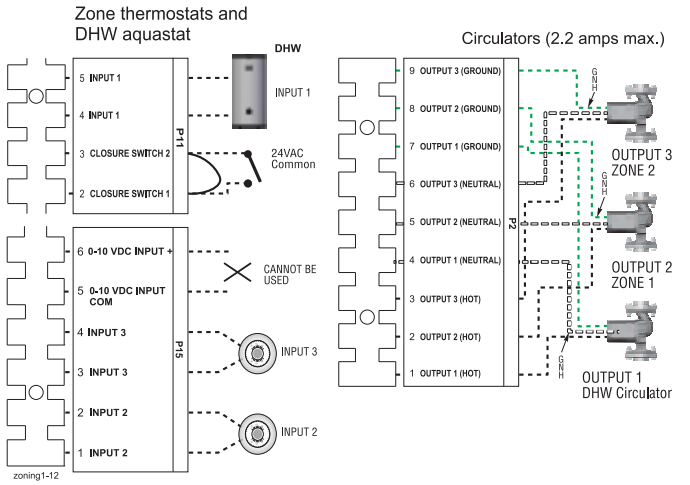

WMCR circulator zone controller plus DHW controlled by boiler, DHW piped directly to boiler

1. Review wiring information on page 49 (120VAC outputs) and page 53 (24VAC inputs).
2. To shut down Space Heating during DHW operation: Provide and connect relay R1 (120VAC coil with NC contact) to interrupt the Zone controller's ZC-ZR (120VAC operating circuit).
3. The configuration at right uses INPUT 2 for space heating with the call for heat coming from the zone controller (X-X). INPUT 1 uses the input from a DHW aquastat.
4. The factory default settings assign inputs 1, 2 and 3 to PRIORITY 2. Keep input 2 assigned to PRIORITY 2. To set up PRIORITY 2, choose the space heating system type that matches the heating system during the WIZARD setup or manually in the PRIORITY 2 menu.
5. Assign INPUT 1 to PRIORITY 1, which is factory default configured for DHW applications. Wire the DHW circulator to OUTPUT 1.
6. Use the factory default settings for DHW and for the heating system type chosen, or change if needed. Factory defaults should work for other settings not listed above.

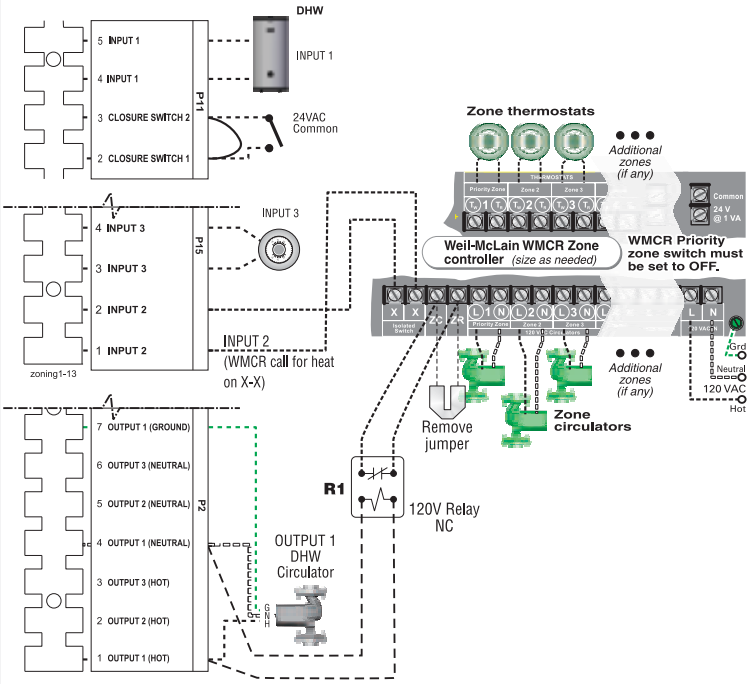

P15, P11 and P2 are on the terminal strip

Zoning with the SlimFit Control *(continued)*

B. Zoning with ZONE VALVES, suggested applications

Two space heating zones (no DHW)

1. Review wiring information on page 49 (120VAC outputs) and page 53 (24VAC inputs).
2. The configuration at right uses INPUT 2 and 3 for space heating thermostats. INPUT 1 is reserved here for configuring the operation of the system circulator.
3. The factory default settings assign inputs 1, 2 and 3 to PRIORITY 2. Keep inputs 2 and 3 assigned to PRIORITY 2. To set up PRIORITY 2, choose the space heating system type that matches the heating system during the WIZARD setup or manually in the PRIORITY 2 menu.
4. Use the factory default settings for the heating system type chosen, or change if needed.
5. Assign INPUT 1 to AUX PUMP/OUTPUT. Then select ANY INPUT BY ITS PRIORITY when prompted for when to activate the output. This will cause the system pump to run when either of the zones calls for heat. Confirm that Priority 2 RUN AUX PUMP/OUT is set to YES.
6. INPUT 1 (P11-4/5) cannot be used for a wired connection (as shown at right) because it is being used in the control setup to run the system circulator.
7. Factory defaults should work for other settings not listed above.

⚠WARNING The system must be equipped with a by-pass pressure regulating valve. Flow can occur with zone valves closed.

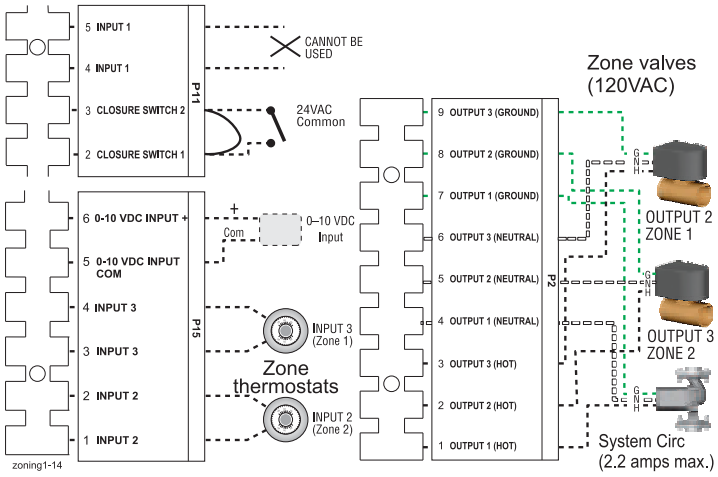

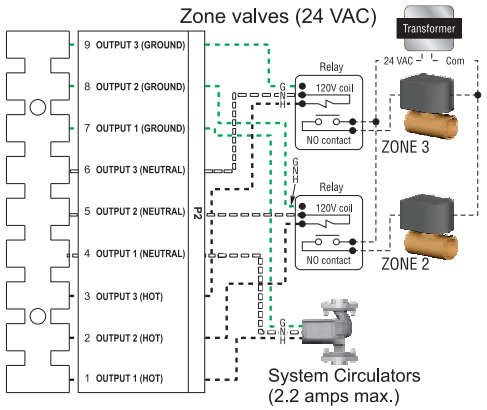

WMZV zone valve zone controller plus DHW controlled by boiler, DHW piped directly to boiler

1. Review wiring information on page 49 (120VAC outputs) and page 53 (24VAC inputs).
2. The configuration at right uses INPUT 2 for space heating with the call for heat coming from the zone controller (X-X). INPUT 1 uses the input from a DHW aquastat.
3. The factory default settings assign inputs 1, 2 and 3 to PRIORITY 2. Keep input 2 assigned to PRIORITY 2. To set up PRIORITY 2, choose the space heating system type that matches the heating system during the WIZARD setup or manually in the PRIORITY 2 menu.
4. The system circulator, wired to OUTPUT 2, will turn on whenever there is a call for heat from the zone controller.
5. Assign INPUT 1 to PRIORITY 1, which is factory default configured for DHW applications. Wire the DHW circulator to OUTPUT 1.
6. Use the factory default settings for DHW and for the heating system type chosen, or change if needed. Factory defaults should work for other settings not listed above.

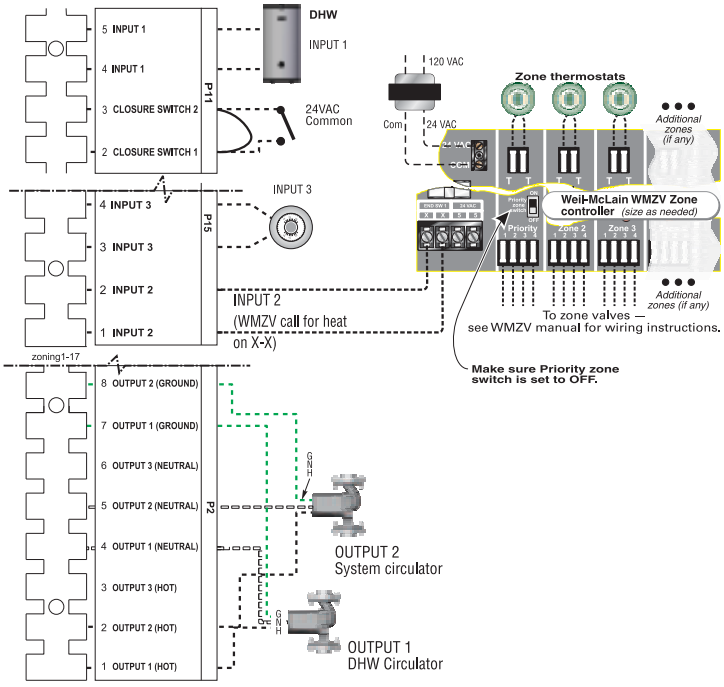

P15, P11 and P2 are on the terminal strips

Control operation and setup

Control setup

1. Set control parameters using the WIZARD option provided on initial start-up or manually enter parameters using control menus (see Figure 61, page 68 and following pages for information.)
2. See instructions beginning on page 63 for basic systems and minimum settings required (using factory defaults).
3. This manual provides set-up information for a single boiler using BASIC control setting options. See the SlimFit Advanced Manual for single-boiler advanced settings and for all multiple boiler applications.

⚠WARNING

Boiler Model, Altitude are critical settings. Failure to set correctly could result in severe personal injury, death or substantial property damage.

Temperature settings — You must ensure that the Control is set for the proper water temperatures for the system. Excessive water temperature can cause significant property damage in some applications.

Multi-temperature systems — If the heating system includes circuits that require lower temperature water (radiant slab circuits, for example) as well as higher temperature circuits (DHW, finned tube baseboard, etc.), it is recommended to protect low-temperature circuits with limit controls that are wired to an Control external limit circuit. Failure to provide regulation can result in substantial property damage.

Control features

- ❑ Single or multiple boiler control (with lead boiler rotation).
- ❑ Graphic and robust text display for ease of operation monitoring and troubleshooting.
- ❑ Three programmable priority assignments for up to three heat inputs.
- ❑ Preset operating parameters for typical heating systems, including target temperatures, reset curves and circulator assignments.
- ❑ Integral outdoor reset option, with reset curves matched to the system type selected.
- ❑ ModBus communications for external communication and monitoring.
- ❑ 0-10VDC input modulation or remote target input.
- ❑ Four pump outputs, 3 – powered, 1– dry contact.
- ❑ Additional heat demand operation to call a second heat source to help supply the energy required for heating.
- ❑ Advanced PI response to anticipate system needs.
- ❑ Flue temperature modifier to target temperature.
- ❑ Modulation based on flue sensor and boiler/system supply/return sensors.
- ❑ Dual temperature sensors on boiler outlet and flue, providing redundant protection.
- ❑ Boiler is shipped with an outdoor sensor and strap on system supply and return sensors.
- ❑ Blower speed modulation to control boiler firing rate.
- ❑ Alarm relay on error/fault for use with an audible safety.
- ❑ CSD-1 Valve set leakage test feature (See Advanced Manual).
- ❑ Built-in 0–10 VDC signal generator to allow parallel modulation of multiple boilers; also capable of accepting 0–10 VDC input.
- ❑ The boiler is equipped with a low water cutoff, factory wired to the Control, manually reset through the Control.

Sequence of operation

1. Figure 54 is a summary of the operating sequence for the Control.
   - The statuses shown appear in the display as the Control cycles the boiler. See Figure 58, page 66 for screen shots.
   - The display will flash red if a problem has been detected.

Figure 54 Control sequence of operation

Display status text	Control action *(Also see Figure 58, page 66)*
POWER UP	• Check the boiler model listed on the power-up screen. If it is not correct, turn off the boiler. See page 69 for instructions to change setting. • When power is turned on, the screen lists sensors that are detected. If any sensor is not listed, make sure it is connected correctly. Turn off power and restart.
Standby	• Standby - no calls for heat. • Toggles through no dots, 1 dot, 2 dots, then 3 dots while in standby (wrench symbol will show instead if maintenance is needed).
Blower ON	• Call for heat detected. • Display on with BLUE light (space heating) or PURPLE light (DHW). • Start min/max timers if more than one system is calling - highest priority starts first. • Start circulators for this priority setup based upon settings. • Calculate target temp — If sensor temp is below target temp, begin firing sequence. • Wait on closure switch. • Blower to purge speed for prepurge. • Min air flow switch. • Pre-purge.
Ignition	• After prepurge times out, transition to ignition speed. • Begin ignition cycle. • Activate gas valve and ignition spark. • Continue ignition spark for ignition period. • Turn off spark and use flame rod to check for flame signal.
Space Heating	• Flame detected. • Release boiler to modulation. • NOTE: If flame is not detected, the gas valve is turned off, blower turns on (postpurge), and control starts cycle again. After 2 failures, the control locks out. • If priority timer times out, switch to next priority and start priority timer. • If demand satisfied, go to postpurge.
DHW Heating	• Flame detected. • Release boiler to modulation. • NOTE: If flame is not detected, the gas valve is turned off, blower turns on (postpurge), and control starts cycle again. After 2 failures, the control locks out. • If priority timer times out, switch to next priority and start priority timer. • If demand satisfied, go to postpurge.
Blower OFF	• Demand satisfied (temperature reaches target temperature or limit setting). • Gas valve off. • Blower to ignition speed for postpurge. • Return to standby after purge.
Maintenance	• Display turns BLUE, toggling between graphic screen and maintenance screen (occurs if maintenance schedule timer times out). • Will show during standby only. • Boiler operates as normal.
Error/fault	• Display turns RED due to error or limit event. • Flashing display means lockout condition.
WWSD	• Warm weather shut down - the boiler will not be allowed to fire on space heating if the outside temperature is greater than the WWSD setting. • DHW operation is not affected by WWSD.

Control operation and setup *(continued)*

Control Priorities & Input/Outputs

- For heating installations with multiple systems, the Control uses PRIORITIES to determine the order of operation of the systems. The control's MAX and MIN time settings determine the maximum and minimum times a system will be operated before being turned off to allow another system to operate. A typical example is DHW priority — heat demand from the DHW system is given preference over space heating, if set to use Priority 1.
- Each PRIORITY has its own set of operating parameters. The control prompts the user to select the system type (finned tube baseboard, DHW, etc.) and is factory programmed with parameters suited to each of these system types. The user can also choose CUSTOM to create a system type.
- The Control provides up to three priorities for single boiler applications and up to four priorities for network boiler applications. The order of operation is: PRIORITY 1, PRIORITY 2, PRIORITY 3.
- The 120VAC power output to the boiler circulator is provided by a relay located on the boiler's Pump/Communications Board. For each of the priorities, the control can be setup to run the boiler pump or to leave it off. It is recommended to set Blr Circ to OFF for DHW that is directly piped with its own DHW Circ.
- Each boiler has three input/output pairs (INPUT/OUTPUT 1, 2 and 3. Control setup prompts the user to assign each of these I/O pairs to a PRIORITY. The Control then knows which system (priority) to operate when the input receives a call for heat. On a call for heat to an input, the Control closes the corresponding output (120VAC) and begins controlling the boilers according to the setup for the assigned priority.
- The MAX ON TIME setting controls the maximum time a priority will be allowed to run before switching to a lower priority's call for heat. The MIN ON TIME setting controls the minimum time a priority will be operated before switching to a higher priority's call for heat, or the next lower priority.
- When multiple inputs are set up on the same priority, they will run at the same time if the priority and inputs are active.

Control operation

- The control responds to signals from:
  - Room thermostats.
  - DHW aquastats (if used).
  - Temperature sensors (boiler return, boiler supply, flue temperature) and, when used, system supply and system return, outdoor temperature). **For optimal performance, it is recommended to install the system supply and return sensors.**
- The control automatically adjusts blower speed (and gas flow rate) to match boiler output to space heating and/or DHW heating demand.
- The control provides three inputs and three outputs (for circulators or auxiliary devices) plus a fourth boiler circulator output.
- The outdoor temperature is used for supply temperature reset operation and for the warm weather shut down (WWSD) option.
- System presets:
  - The Control provides presets by system type (see Figure 59, page 67 for complete list).

Setting Up the Boiler	
Step 1	• DETERMINE input/output needs – • What are the inputs? – Thermostats, remote contacts, end switches, etc. • What does each control's output need to do? – operate a pump, activate an air louver, etc.
Step 2	• Connect wiring to the control inputs and outputs to accomplish the purposes set in Step 1.
Step 3	• Install the boiler following all instructions in the SlimFit Boiler Manual before proceeding further. • See the Advanced Manual for multiple boiler installations. • Follow instructions in the Boiler Manual to start up and power the boiler.
Step 4	• Use the WIZARD (below) or enter control parameters manually (skip Wizard).

Control WIZARD

- The Wizard is available on initial setup of the boiler. It leads through a step-by-step setup procedure designed for the application chosen.
- Context-sensitive help is available to explain the purpose of key setup items.
- Advanced settings for single boiler applications can be accessed manually from the Contractor menu.

WIZARD Sequence	
Boiler Settings	• Altitude – ⚠WARNING – must be set correctly for proper operation. • WWSD – set outdoor temperature above which space heating will be deactivated.
Inputs/ Outputs	• Select the usage of inputs 1, 2 and 3. • Determine usage of outputs 1, 2 and 3 (outputs correspond to inputs).
Set Priorities	• Assign priorities 1, 2 and 3 to the inputs.
System Settings	• Set system settings or leave at their defaults.
System Types	• Specify what system type is connected to each of the three outputs; each system type causes the control to preset. operating temperatures.
Output Activation	• (When applicable) Select when to activate AUX PUMP/ OUTPUT – by input, always on, external switch, etc.
Priority Switching	• Set maximum and minimum timings for priorities.
Date/Time	• Set date and time – important for control diagnostic logging.
Information	• Set installer name and contact information. • Enter CP#, install date, maintenance date, etc. • Set automatic maintenance notification timing.

Control operation and setup *(continued)*

Outdoor reset operation

1. Set desired temperatures for space heating zones.
2. For an explanation of the target temperatures and associated outdoor temperatures, see Figure 55.
3. The temperature settings discussed below are accessed in the priority menu for the applicable system. For detailed explanations of the priority menus, see Figure 63, page 70.

SUPPLY MAX

1. Set Supply max to the required supply water temperature for the system at design maximum heat loss (typically 180°F for finned tube baseboard on new installations).

SUPPLY MIN

1. Supply min should equal the desired minimum supply water temperature for the system.
2. This could be set as low as 70°F, which would supply "zero heat" when outdoor temperature is 70°F, because supply water temperature would equal room temperature.
3. See examples in Figure 55.

OD RESET MAX

1. OD RESET MAX means the outdoor temperature at which the target temperature reaches its minimum (Supply min).
2. In the examples of Figure 55, this occurs at 70 °F (the factory default).

OD RESET MIN

1. OD RESET MIN means the outdoor temperature at which the target temperature reaches its maximum value (Supply max).
2. In the examples of Figure 55, this occurs at 0°F outside (the factory default setting).
3. OD RESET MIN should equal the ODT (outdoor design temperature) for the installation's location.

Remote target operation (0–10VDC input)

1. This function allows a remote analog input to regulate the supply temperature for control operation/modulation. This can be done for any priority, including network and local priorities for multiple boiler networks.
2. The settings discussed below are accessed in the priority menu for the applicable system. For detailed explanations of the priority menus, see Figure 63, page 70.
3. See Figure 56 for an explanation of target temperature vs voltage when using remote target operation.
4. In the priority menu for the applicable system, select 0-10v for the TARGET ADJUST setting.
5. In the same priority menu, select the VOLTS FOR MIN and VOLTS FOR MAX values. VOLTS FOR MIN sets the voltage value for the desired minimum supply temperature. VOLTS FOR MAX sets the voltage value for the desired maximum supply temperature.

Figure 55 Outdoor reset operation

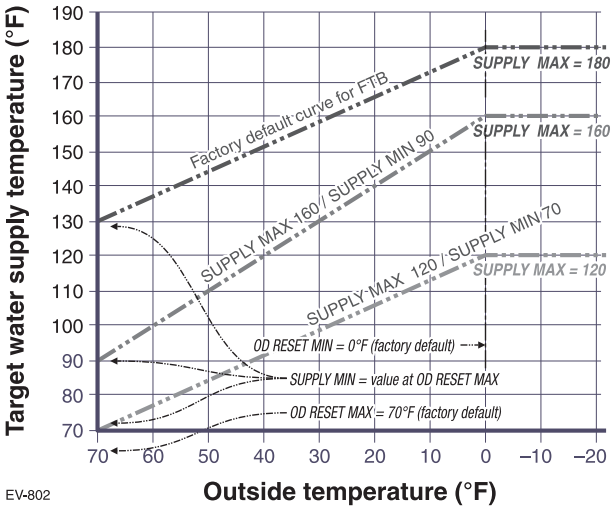

Figure 56 Remote target operation

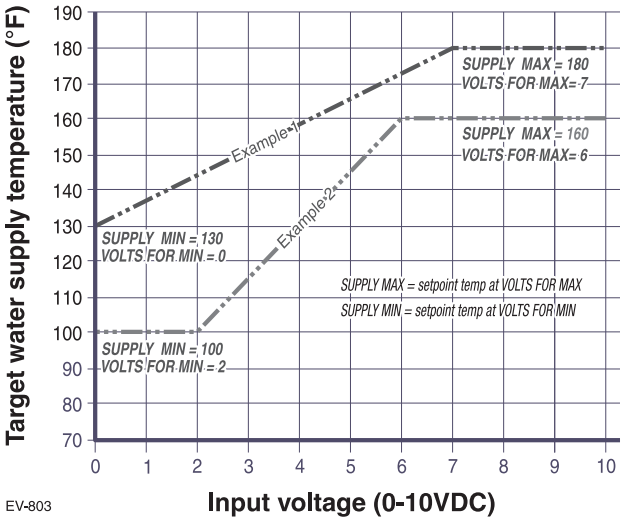

Remote modulation operation (0–10v input)

1. To use 0-10VDC for remote modulation, go to Contractor Menu -> Assign Inputs. Then change Input 1's source to 0-10V. The priority that is assigned to Input 1 cannot be used by any other Input.
2. The boiler comes on at 0.9VDC and turns off at 0.8VDC. 2 VDC = 20% input. 10 VDC = 100% input. These voltage settings are not adjustable.

Control operation and setup *(continued)*

Figure 57 SlimFit single boiler essential settings (**REQUIRED** on initial start-up) — see page 67 for explanation

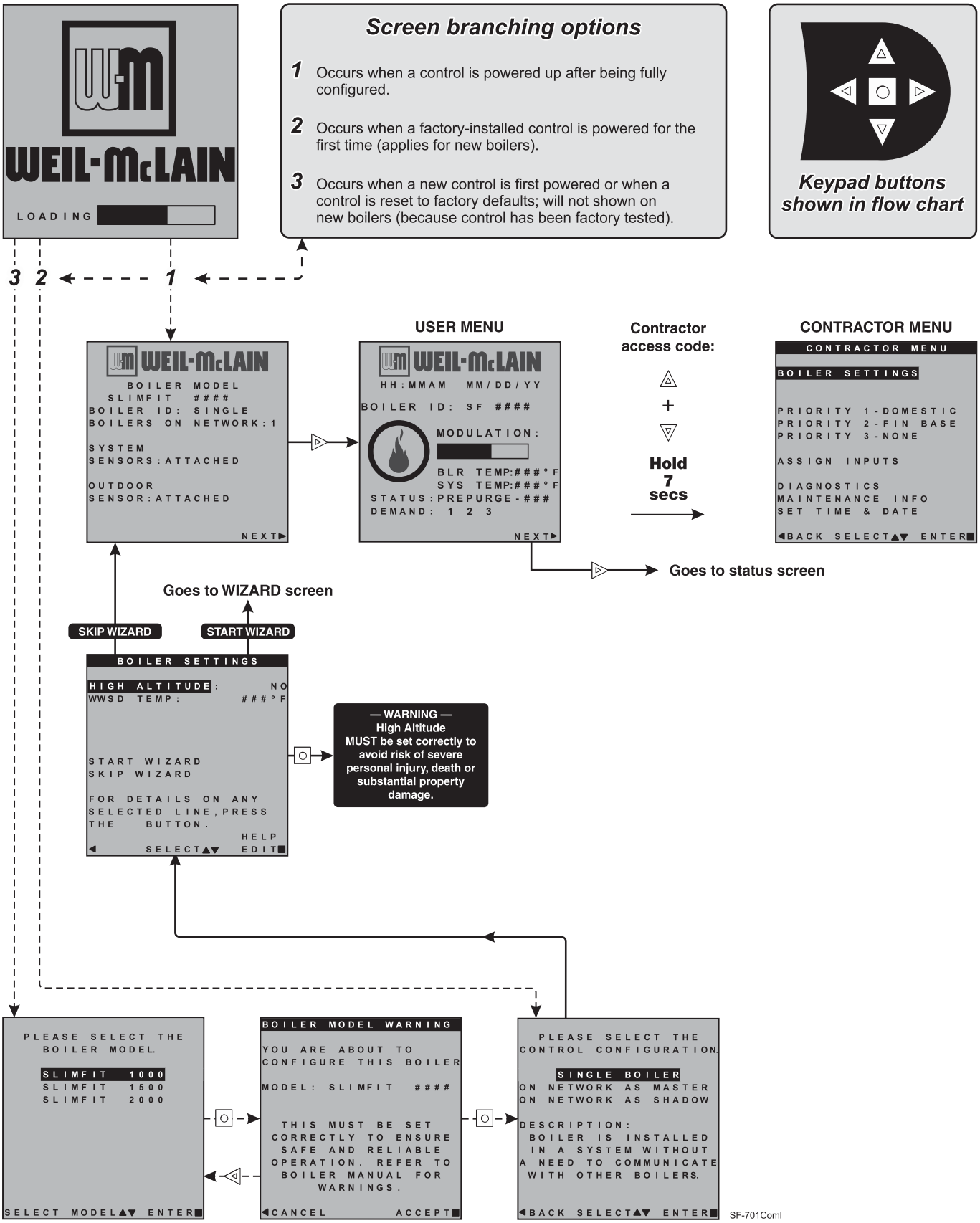

Control operation and setup *(continued)*

Figure 58 SlimFit control display screens and typical navigation

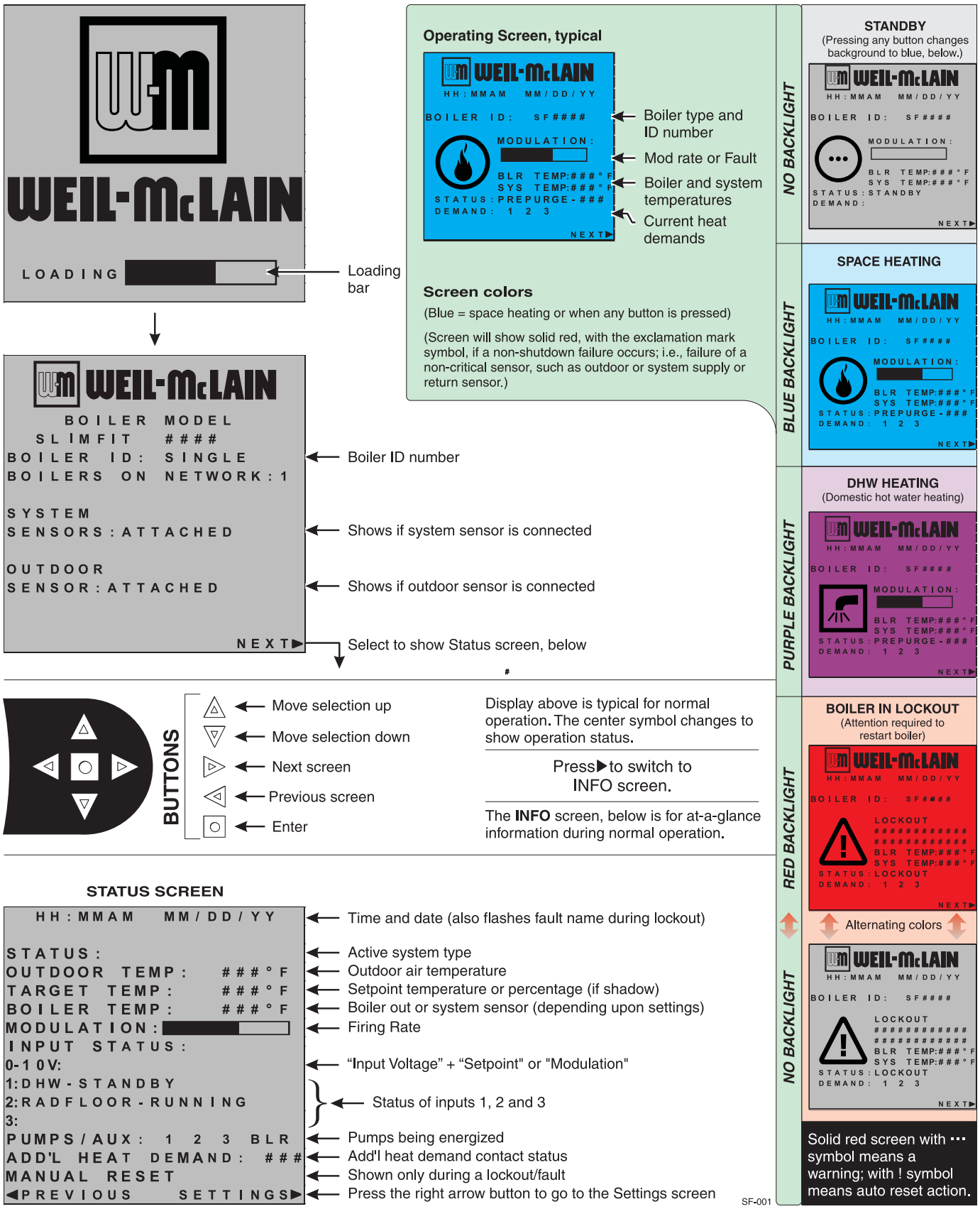

Control operation and setup *(continued)*

Figure 59 SlimFit control settings available in BASIC MODE (see Advanced Manual for ADVANCED MODE settings)

Available settings from CONTRACTOR MENU		
Boiler Settings Menu	**Priority 2 menu**	**Assign Inputs menu**
• Boiler Model	• Inputs Assigned (non-selectable)	**Input 1: TT1**
• Control Type	• System Type	• Priority 1, 2 or 3
• High Altitude	• Target Mod Sensor (non-selectable)	• Source (TT1 or 0-10v)
	• Target Adjust (non-selectable)	• AUX PUMP/OUTPUT
• Manual Reset High Limit Temp	• Supply Max	• Off
• WWSD Temp	• Supply Min (not available for DHW) *	
• Adjust Outdoor	• OD Reset Max (or Volts for Max) *	**Input 2: TT2 and Input 3:TT3**
• Circulator Exercising	• OD Reset Min (or Volts for Min) *	• Priority 1, 2 or 3
• Freeze Protect Circs	• Boost Time *	• AUX PUMP/OUTPUT
• Reset Factory Default		• Off
	Priority 3 menu	
	• Inputs Assigned (non-selectable)	**Diagnostics menu**
Priority 1 menu	• System Type	• See Figure 67, page 73 for details.
• Inputs Assigned (non-selectable)	• Target Mod Sensor (non-selectable)	
• System Type	• Target Adjust (non-selectable)	**Maintenance Info menu**
• Target Mod Sensor (non-selectable)	• Supply Max	• See Figure 72, page 78 for details.
• Target Adjust (non-selectable)	• Supply Min (not available for DHW) *	
• Supply Max	• OD Reset Max (or Volts for Max) *	**Set Date and Time menu**
• Supply Min (not available for DHW) *	• OD Reset Min (or Volts for Min) *	• See Figure 72, page 78 for details.
• OD Reset Max (or Volts for Max) *	• Boost Time *	
• OD Reset Min (or Volts for Min) *	* These items only appear in the menus if Target Adjust is active.	
• Boost Time *		

Figure 60 System types available in BASIC MODE (each option shown with factory settings)

System Type	8-Character Abbreviation	3-Character Abbreviation	Supply Max °F	OD Reset Min °F	Supply Min °F	OD Reset Max °F	Run Boiler Pump	Run AUX PUMP/ OUTPUT
Fan-coil	FAN-COIL	FCL	180	0	140	70	YES	YES
Finned Tube Baseboard	FIN BASE	FTB	180	0	130	70	YES	YES
Cast Iron Baseboard	IRONBASE	CIB	180	0	120	70	YES	YES
Cast Iron Radiators	RADIATOR	CIR	180	0	120	70	YES	YES
Radiant - slab on grade	RAD SLAB	RSG	120	0	80	70	YES	YES
Radiant - thin slab	RAD SLAB	RTS	140	0	80	70	YES	YES
Radiant - below floor (staple up)	RADFLOOR	RSU	160	0	90	70	YES	YES
Radiant - above floor (sleeper system)	RADFLOOR	RAF	140	0	90	70	YES	YES
Domestic Hot Water	DOMESTIC	DHW	180	N/A	N/A	N/A	NO	NO
Custom (user defined)	XXXXXXXX (user input)	first three of user input	180	0	70	70	YES	YES

CONTRACTOR menus

WARNING **Boiler Model, Altitude and Fuel Type are critical settings.** Failure to set correctly could result in severe personal injury, death or substantial property damage.

1. Access contractor menus by pressing and holding the UP and DOWN arrow keys at the same time for 7 seconds.
2. See the following pages for explanations of control setting options.

Figure 61 SlimFit control menu access — accessing contractor menus

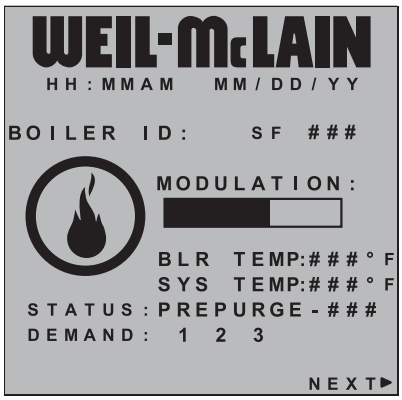

△ + ▽ **Hold 7 secs**

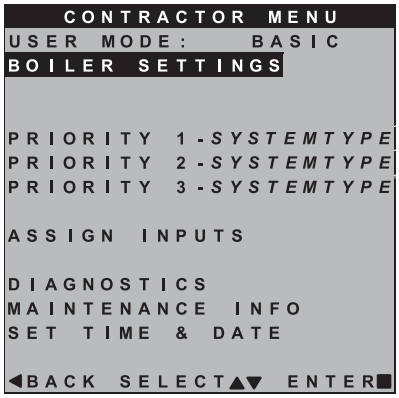

Highlight item, then press □ **to select** →

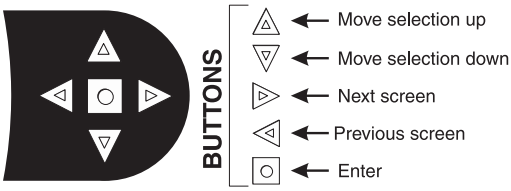

CONTROL NAVIGATION BUTTONS

SF-002a

MENU ITEM	PURPOSE	More information
USER MODE	• The default for this setting is **BASIC** mode. Screens shown in this manual assume the USER MODE is set to BASIC. For advanced features available in **ADVANCED** mode, see the **SlimFit** Advanced Manual.	
BOILER SETTINGS	• Set/change boiler model, control type, high altitude setting, ODT sensor requirement, manual reset, high limit and WWSD temperature settings, outdoor sensor temp adjustment, circulator exercising, freeze protection setup, and restore to factory default option.	See page 69
PRIORITY 1	• These settings control operating temperatures and behaviors for systems that are assigned to "PRIORITY 1."	See page 70
PRIORITY 2	• These settings control operating temperatures and behaviors for systems that are assigned to "PRIORITY 2."	See page 70
PRIORITY 3	• These settings control operating temperatures and behaviors for systems that are assigned to "PRIORITY 3."	See page 70
ASSIGN INPUTS	• These settings assign Priority 1, 2 or 3 to each of the three inputs to the control.	See page 71
DIAGNOSTICS	• Use to review current and historical information including previous lockouts.	See page 73
MAINTENANCE INFO	• Used to set contractor contact information, boiler information and maintenance dates.	See page 78
SET TIME & DATE	• Use to set date and time — important since fault occurrences are date/time stamped.	None

Screens shown above are typical only. Actual screens depend on control settings chosen.

BOILER SETTINGS menu, BASIC mode

WARNING **Boiler Model, Altitude and Fuel Type are critical settings.** Failure to set correctly could result in severe personal injury, death or substantial property damage.

1. Access contractor menus by pressing and holding the UP and DOWN arrow keys at the same time for 7 seconds.
2. See Figure 61, page 68 for the screen sequences up to the CONTRACTOR menu.

Figure 62 SlimFit BASIC mode BOILER SETTINGS options (USER MODE must be set to BASIC)

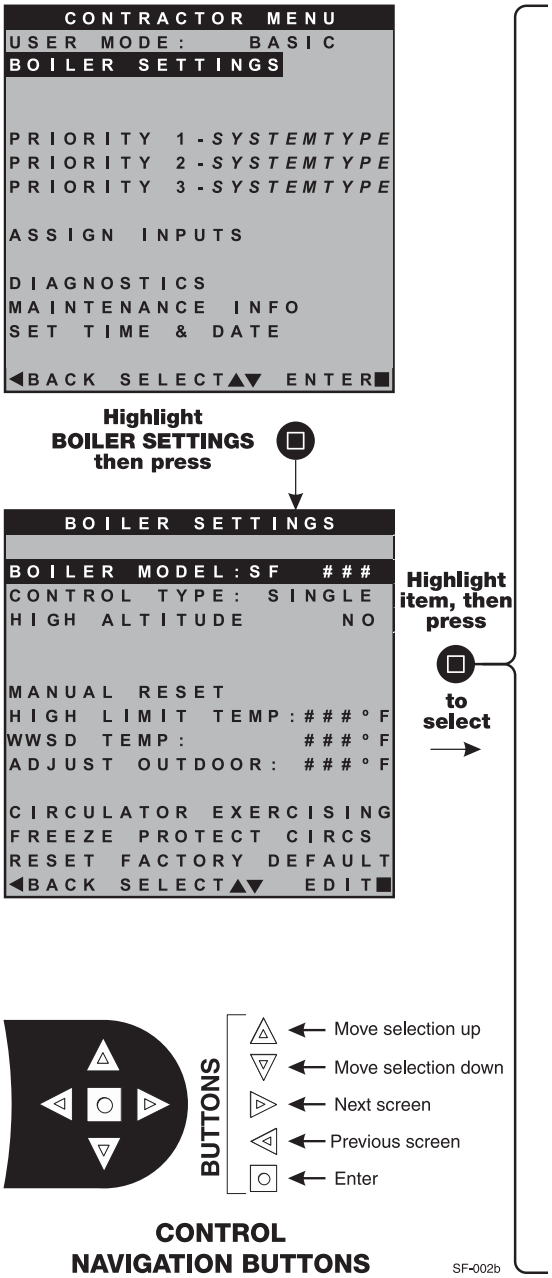

MENU ITEM	DESCRIPTION
BOILER MODEL	• WARNING MUST be set to correct model. • Check the boiler model against the model listed on the boiler's rating plate. Change the selection to the correct model if not. Also verify the model number on the control display at power-up. Failure to correct would result in severe personal injury, death or substantial property damage.
CONTROL TYPE	• Select single, master or shadow. Must be set to Single for basic mode.
HIGH ALTITUDE	• WARNING If the boiler is installed at an altitude above 5500 feet, select YES for high altitude. The control will automatically adjust firing rates (blower speeds) to compensate for altitude. Altitude MUST be set correctly to avoid risk of severe personal injury, death or substantial property damage.
MANUAL RESET HIGH LIMIT TEMP	• If boiler outlet water temperature exceeds this temperature, the Control will shut down the boiler and enter lockout. Changing this setting is NOT recommended.
WWSD TEMP	• WWSD stands for warm weather shut down. It means the boiler will not be allowed to fire if the outside temperature is greater than the WWSD setting. When the boiler is kept off because the outside temperature is above WWSD, the graphic display will show WWSD, and the boiler will remain in standby until the outside temperature drops below WWSD temperature. WWSD does not apply to DHW systems. The outdoor sensor must be installed to use this function.
ADJUST OUTDOOR	• Use this setting to calibrate the outdoor sensor when needed to compensate for variations in lead length or other factors that could affect total resistance in sensor circuit.
CIRCULATOR EXERCISING	• For each circulator, select whether you want the control to automatically start the circulator and run for 10 seconds for each 72-hour period of inactivity.
FREEZE PROTECT CIRCS	• This function automatically fires the boiler at low fire and starts the circulators chosen if the heat exchanger sensors detect a temperature less than 45 °F. Burner is turned on if temperature drops below 40 °F. Circulators and burner turn off when the temperature rises above 48 °F.
RESET FACTORY DEFAULTS	• Use this function to restore all control settings to factory default values — will require complete restart and setup of control after resetting. Record information from the MAINTENANCE screen and any history information that may be of use in the future. ALL stored data is eliminated when reset to defaults except for boiler model number.

Screens shown above are typical only. Actual screens depend on control settings chosen.

PRIORITY 1, 2, 3 menus, BASIC mode

WARNING **Boiler Model, Altitude and Fuel Type are critical settings.** Failure to set correctly could result in severe personal injury, death or substantial property damage.

1. Access contractor menus by pressing and holding the UP and DOWN arrow keys at the same time for 7 seconds.
2. See Figure 61, page 68 for the screen sequences up to the CONTRACTOR menu.

Figure 63 SlimFit BASIC mode PRIORITY options (USER MODE must be set to BASIC)

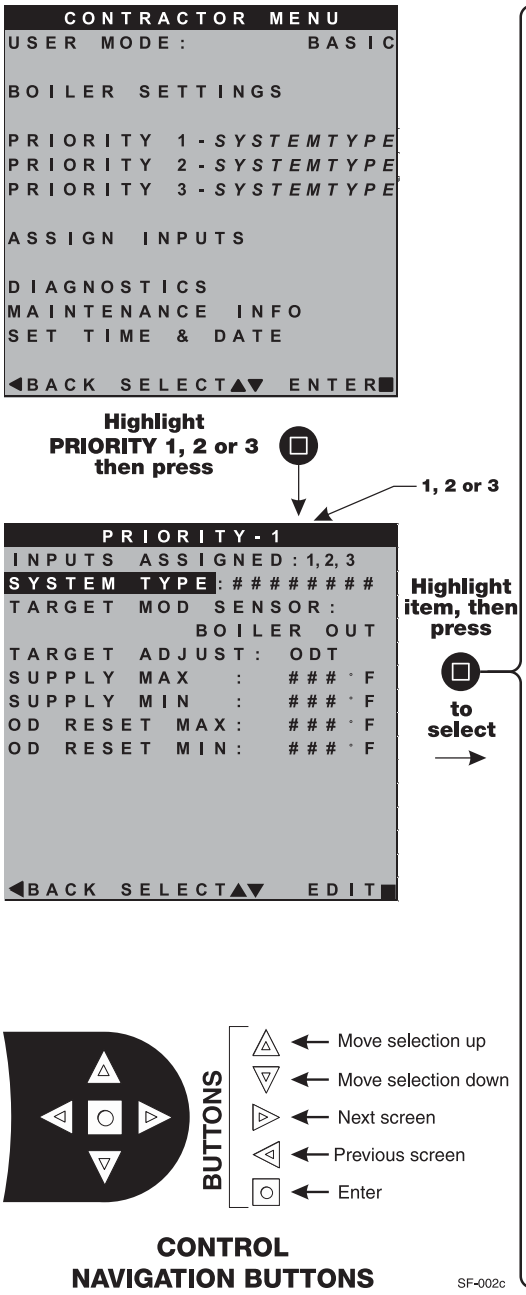

MENU ITEM	DESCRIPTION
INPUTS ASSIGNED	• Lists all the inputs already assigned to this PRIORITY. Inputs will be listed as 1, 2, 3. • Shows NONE if there are no inputs assigned to this priority .
SYSTEM TYPE	• Select the system type for this PRIORITY, based on the heating terminal units in the system (see Figure 59, page 67). Use the CUSTOM selection to set the control for a different system type. The factory preset values for SUPPLY MAX, SUPPLY MIN, OD RESET MAX and OD RESET MIN are chosen based on the normal best setting for the terminal units.
TARGET MOD SENSOR	• Choose SYSTEM SUPPLY or BOILER OUT to determine which will be the primary temperature sensor. The control will modulate boiler input to reach the TARGET temperature. (Default is System Supply.) If system sensors are not used, boiler defaults to using heat exchanger outlet sensor in place of system sensor. • Not adjustable in Basic Mode, see Advanced Manual for information on adjusting this parameter.
TARGET ADJUST	• Select how target temperature is calculated by control: NONE (no reset, fixed target temperature), 0-10V (target temperature based on analog input from remote source), ODT (outdoor reset operation; default setting). • Not adjustable in Basic Mode, see Advanced Manual for information on adjusting this parameter.
SUPPLY MAX	• Set SUPPLY MAX to the required supply water temperature for the system at design maximum heat loss (typically 180 °F for finned tube baseboard on new installations.)
SUPPLY MIN	• SUPPLY MIN should equal the desired minimum supply water temperature for the system. • This line is not shown on priorities configured as DHW system type or Heating system type, if outdoor temperature sensor not used. See Advanced Manual for information on adjusting this parameter .
OD RESET MAX	• OD RESET MAX is the outdoor temperature at which the target temperature reaches its minimum (SUPPLY MIN). • This line is not shown on priorities configured as DHW system type or Heating system type, if outdoor temperature sensor not used. See Advanced Manual for information on adjusting this parameter .
OD RESET MIN	• OD RESET MIN means the outdoor temperature at which the target temperature reaches its maximum value (SUPPLY MAX). • OD RESET MIN should equal the ODT (outdoor design temperature) for the installation's location. • This line is not shown on priorities configured as DHW system type or Heating system type, if outdoor temperature sensor not used. See Advanced Manual for information on adjusting this parameter .

Screens shown above are typical only. Actual screens depend on control settings chosen.

ASSIGN INPUTS menu, BASIC mode

WARNING **Boiler Model, Altitude and Fuel Type are critical settings.** Failure to set correctly could result in severe personal injury, death or substantial property damage.

1. Access contractor menus by pressing and holding the UP and DOWN arrow keys at the same time for 7 seconds.
2. See Figure 61, page 68 for the screen sequences up to the CONTRACTOR menu.

Figure 64 SlimFit BASIC mode ASSIGN INPUT options (USER MODE must be set to BASIC) — see Figure 65, page 72 and Figure 66, page 72 for explanation of AUX PUMP/OUTPUT settings

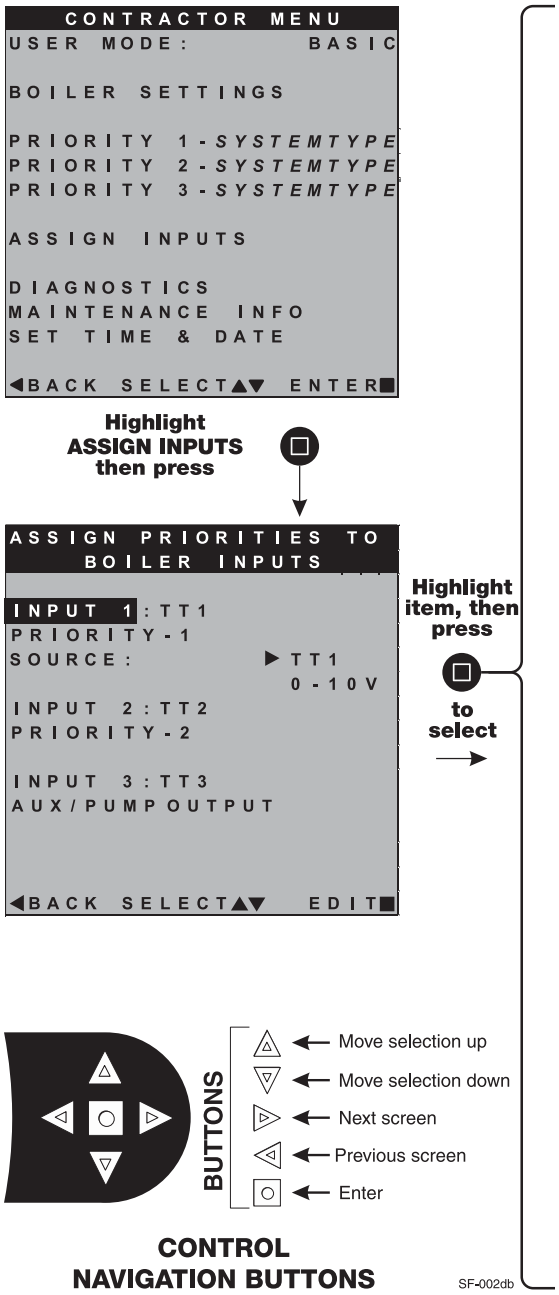

MENU ITEM	DESCRIPTION
Overview	• There are three priority levels defined by the settings chosen in Figure 63, page 70. • For DHW priority, make sure PRIORITY 1 is defined for a DHW system. • If DHW priority is required and analog input is used for space heating, assign INPUT 2 to the DHW aquastat (TT2) and INPUT 1 as PRIORITY 2 and SOURCE set to 0-10V.
INPUT 1	• Assign priority (system type) for INPUT 1 — options are: • PRIORITY 1 — assigns INPUT 1 to PRIORITY 1 system. • PRIORITY 2 — assigns INPUT 1 to PRIORITY 2 system • PRIORITY 3 — assigns INPUT 1 to PRIORITY 3 system • AUX PUMP/OUTPUT • OFF • NOTE: For INPUT 1 only, select SOURCE = TT1 for thermostat input or 0-10V if analog input is required.
INPUT 2	• Assign priority (system type) for INPUT 2 — options are: • PRIORITY 1 — assigns INPUT 2 to PRIORITY 1 system. • PRIORITY 2 — assigns INPUT 2 to PRIORITY 2 system • PRIORITY 3 — assigns INPUT 2 to PRIORITY 3 system • AUX PUMP/OUTPUT • OFF
INPUT 3	• Assign priority (system type) for INPUT 3 — options are: • PRIORITY 1 — assigns INPUT 3 to PRIORITY 1 system. • PRIORITY 2 — assigns INPUT 3 to PRIORITY 2 system • PRIORITY 3 — assigns INPUT 3 to PRIORITY 3 system • AUX PUMP/OUTPUT • OFF

Screens shown above are typical only. Actual screens depend on control settings chosen.

ASSIGN INPUTS menu, BASIC mode *(continued)*

Figure 65 AUX PUMP/OUTPUT operation (accessed in ASSIGN INPUTS menu – see Figure 64, page 71)

Option	Activation conditions	Suggested uses
ALWAYS ON	• Output is always energized whenever the control is powered.	• Hot loop for seasonal boilers that are manually shut down at end of season and started up at start of heating season.
EXTERNAL SWITCH	• The output is energized on closure of an external switch wired to this input and is de-energized when the external switch opens.	• Hot loop for boilers whose CH is manually shut down at end of season and started up at start of heating season, but remain available for local calls (DHW, etc.).
OUTDOOR BELOW WWSD	• This output is energized only when outdoor temperature is below the WWSD setting (see BOILER SETTINGS menu, Figure 62, page 69). • This setting is non-selectable if WWSD is set to OFF or ODT is not connected at initial boiler power. If Outdoor Below WWSD is already chosen and WWSD is later set to OFF, Outdoor Below WWSD will behave as Always On.	• Hot loop for boilers whose CH is automatically shut down based on outdoor temperature (inferred heat loss), but remain on for local calls (DHW, etc.).
ANY TT INPUT	• The assigned output is energized if there is an input closure on this boiler. • The assigned output will de-energize once there are; no input on this boiler, post-purge has finished, and post-pump time has expired. • If the closed input is configured for a heat demand, its output will de-energize after post-purge and post-pump.	• Energize a system pump relay if pump must run during all heating calls.

ANY TT INPUT BY ITS PRIORITY SETTINGS	• The assigned output is energized:
	  • If there is an input closure on this boiler.
	  . . . and . . .
	  • RUN AUX PUMP/OUTPUT is set to YES for the priority assigned to the closed input.
	• The assigned output will de-energize once there are; no input closures on any of the network boilers, post-purge has finished, and post-pump time has expired.
		• Energize a system pump relay if pump must run only on some heat calls (such as systems with locally-connected DHW heating).

BURNER DEMAND	• The assigned output is energized when the boiler receives a call for heat and starts to pre-purge. • The assigned output is de-energized once the burner is off and post-purge is complete.	• Use for interlocking with combustion air damper, flow switch, etc.

Figure 66 AUX PUMP/OUTPUT operation — start, run and stop, based on boiler status

Option	Standby	TT Closed	Pre-Pump	Pre-Purge	Burner Running	Post-Purge	Post-Pump	Standby	Comments
ANY TT INPUT OR ANY TT INPUT BY ITS PRIORITY SETTINGS	*off*	*ON* →	→	→	→	→	→	*off*	• See Figure 65 for explanation of differences between the ANY TT INPUT options.
BURNER DEMAND	*off*	*off*	*off*	*ON* →	→	→	*off*	*off*	

DIAGNOSTIC menu

Figure 67 DIAGNOSTICS menu navigation (see Figure 58, page 66 for access information)

Menus	Next screen	Next screen	Next screen	Next screen
Follow information at the bottom of each screen to navigate to next/previous screen or enter/save data				
DIAGNOSTICS	TEMPERATURES	STATUS: ########## BOILER OUT1: ### °F BOILER OUT2: ### °F HEAT EXCHANGER 1: ### °F BOILER IN: ### °F SYSTEM SUPPLY: ### °F SYSTEM RETURN: ### °F FROM SENSOR: ###### FLUE 1: ### °F FLUE 2: ### °F OUTDOOR TEMP: ### °F FROM SENSOR: ######	See following pages for details.	
	INPUTS	STATUS: ########## INPUT1: ######## (8-character system type) INPUT2: ######## (8-character system type) INPUT3: ######## (8-character system type) 0–10V INPUT: ##. #V LINKED TO MASTER: ### DEMAND OF MASTER: ### MANUAL/AUTO LIMIT: ######/###### MIN AIR FLOW SWITCH: ###### LOW WTR CUTOFF: ###### AIR P-SWITCH: ###### GAS P-SWITCH: ###### CLOSURE SWITCH: ###### BLOWER SPEED: ####RPM FLAME SIGNAL: ###	See following pages for details.	
	OUTPUTS	STATUS: ########## GAS VALVE: ### CIRC OUTPUT 1: ### CIRC OUTPUT 2: ### CIRC OUTPUT 3: ### BOILER CIRC: ### BLOWER SIGNAL: ###% ADD'L HEAT DEMANDS: ### ALARM: ### 0–10V OUTPUT: ##. #V	See following pages for details.	
	RUNTIME	BURNER TIME: ###HR ROTATE TIME: ###DAYS INPUT1 TIME: ###HR INPUT2 TIME: ###HR INPUT3 TIME: ###HR NETWORK TIME: ###HR IGNITION COUNT: ###	See following pages for details.	
	MASTER-SHADOW COMM (shows on shadow boilers only)	Boiler ID: ########### Linked to Master: ### Boilers on Network: # Requested to Run: ### Type: ######-## Requested Mod Rate: ### Max Boiler Temp: ### °F Boiler ON Diff: ## °F Boiler OFF Diff: ## °F	See following pages for details.	
	NETWORK BOILERS (shows on master boilers only)	Shows firing rate, boiler temperature, active priority, with system type and sequence order of all boilers on the network.	See following pages for details.	

DIAGNOSTICS menu *(continued)*

Figure 68 Figure 68, page 74 **DIAGNOSTICS** menu navigation, continued (see Figure 68, page 74 for access information)

Menus	Next screen	Next screen	Next screen	Next screen
Follow information at the bottom of each screen to navigate to next/previous screen or enter/save data				
DIAGNOSTICS *(cont.)*	NETWORK INPUTS (shows on master boilers only)	Shows input status of all network boiler inputs.		
	SOFTWARE VERSIONS	DISPLAY WM#.## MAIN MICRO WM#.## SECOND MICRO WM#.##	See following pages for details.	
	PAST ERRORS	CONTROL FAULTS: ### IGNITION RETRIES: ###	See following pages for details.	
		MANUAL RESET CNT: ###	See following pages for details.	
		AUTO RESET CNT: ###	See following pages for details.	
		LOCKOUT HISTORY 1 LOCKOUT HISTORY 2 LOCKOUT HISTORY 3	LOCKOUT HISTORY # FAULT NAME: #### FAULT TYPE: #### TIME: HH:MM AM DATE: MM/DD/YY STATUS: ######## TEMPERATURES INPUTS OUTPUTS	TEMPERATURES INPUT STATUS OUTPUT STATUS
	MANUAL TEST MODE (Single boiler or network Shadow boiler)	STATUS: ######## HEAT EXCHANGER: #### TARGET: ### °F or "%" for network MODULATION: ######## BOILER OUT: ### °F BOILER IN: ### °F SYSTEM SUPPLY: ### °F SYSTEM RETURN: ### °F FLUE: ### °F OUTDOOR: ### °F BLOWER SIGNAL: ###% BLOWER SPEED: ###RPM FLAME SIGNAL: ### FORCE RATE: AUTO	See following pages for details.	
	MANUAL RESET	PRESS ENTER TO RESET THE FOLLOWING ERROR (SCREEN SHOWS A LIST OF ERRORS)	See following pages for details.	

DIAGNOSTICS menu *(continued)*

Figure 69 DIAGNOSTICS menu details (see Figure 58, page 66 for access information)

Menu/Item	Comment
Temperatures	
Status	Current operating status of the boiler. Prepurge, Ignition, Name of the system Type being satisfied, post purge, Warm Weather Shut down, Trouble
Boiler Out1	Temperature of the first sensing element of the boiler's heat exchanger outlet sensor
Boiler Out2	Temperature of the second sensing element of the boiler's heat exchanger outlet sensor
Heat Exchanger 1:	Temperature of the first sensing element of the boiler's heat exchanger block outlet sensor
Boiler In	Temperature of the boiler's heat exchanger inlet sensor
System Supply	Temperature of the system water after the boiler loop
System Return	Temperature of the system water returning to the boiler loop
From Sensor	Displays where System Supply/Return values are being read from. Most relevant when using multiple sensors connected to the same Master Boiler Network. When Shadow boilers are connected, this will specify which boiler it is reading.
Flue1	Temperature of the first sensing element of the boiler's flue gas sensor
Flue2	Temperature of the second sensing element of the boiler's flue gas sensor
Outdoor	Temperature of the remote outdoor air temperature sensor

Inputs	
Status	Current operating status of the boiler. Prepurge, Ignition, Name of the system Type being satisfied, post purge, Warm Weather Shut down, Trouble
Input 1	Call for heat status on Input 1 (Input 1 can be TT1 or 0-10VDC input)
Input 2	Call for heat status on Input 2
Input 3	Call for heat status on Input 3
0 –10V Input	Voltage input for target adjust or modulation for single boiler
Linked to Master	For Multiple Boiler Networks. Shows if current control is connected to Master boiler
Demand of Master	For Multiple Boiler Networks. Shows if the Master boiler is calling this boiler heat demand
Manual/Auto Limit	External manual limit on low voltage terminal strip (on left)
Min Air Flow Switch	Limit device (inside boiler jacket) that will shut off the boiler if proper air flow is not detected, or is detected when it should not be. (on right)
Low Wtr Cutoff	Low water cutoff device (inside boiler jacket)
Air P-Switch	Limit device (inside boiler jacket) that will shut off the boiler if flue pressure becomes too high
Gas P-Switch	Limit device that will shut off the boiler if gas pressure gets too high or low
Closure Switch	P7 jumper circuit closed or open (flow switch, CAD, etc.)
Blower Speed	Feedback from blower sensor
Flame Signal	Number indicating the presence and quality of the flame used to shut down or boost the boiler
Outputs	
Status	Current operating status of the boiler. Prepurge, Ignition, Name of the system Type being satisfied, post purge, Warm Weather Shut down, Trouble
Gas Valve	Control's gas valve circuit status
Circulator 1	Control's circulator 1 relay status
Circulator 2	Control's circulator 2 relay status
Circulator 3	Control's circulator 3 relay status
Boiler Circ 4	Boiler's circulator
Blower Signal	Control's signal controlling the blower speed
Additional Heat Demand	Additional heat demand contact status
Alarm	Alarm contact status
0 –10V Output	Voltage being output, by P16, pins 1 & 2

DIAGNOSTICS menu *(continued)*

Figure 70 DIAGNOSTICS menu details (continued) (see Figure 58, page 66 for access information)

Menu/Item	Comment
Run Times	
Burner Time	Displays cumulative time the burner has been active (can be increased by user)
Rotate Time	Records the days of operation passed from the last time the Master boiler rotated the firing sequence.
Input 1 Time	Displays cumulative time that Input 1 has been closed (Or 0-10V ≥ 1 volt)
Input 2 Time	Displays cumulative time that Input 2 has been closed
Input 3 Time	Displays cumulative time that Input 3 has been closed
Network Time	Records time this boiler was running on a network call for heat generated by the Master boiler
Ignition Count	Displays total number of successful ignitions

Master-Shadow Comm	
Boiler ID	Displays boiler control type and ID number
Linked to Master	Shows if control is currently linked to a Master control
Boilers on Network	Shows number of boilers currently on network
Requested to Run	Shows if this control is being requested to satisfy a network call
Type	Shows whether the control is Network-P1, Network-P2, or NONE
Requested Mod Rate	Rate coming from the Master
Max Boiler Temp	Displays maximum allowable boiler temperature
Boiler On Diff	Temperature differential from master boiler for network priorities
Boiler Off Diff	Temperature differential from master boiler for network priorities

Network Boilers	**For multiple boilers only – See SlimFit Advanced manual**
###%	Shows current rate of boiler
###F	Shows Boiler Out temperature of boiler
######	Shows priority being satisfied, updated based on active demand
######	Shows system type of call for heat, updated based on active demand
# OF #	Shows the sequence position of that boiler in all the boilers available
BLR#	Shows boiler number this data belongs to

Network Inputs	
Boiler number	Displays boiler number
Inputs	Displays input's configuration and whether it is active. If input is active, it will be displayed in **BOLD** print

Software Versions	
Display	Software version of the microprocessor on the display circuit board
Main Micro	Software version of the main microprocessor on the control circuit board
Second Micro	Software version of the second microprocessor on the control circuit board

TO RESET ALL HISTORY COUNTERS TO ZERO:	To reset all history counters to zero: Enter the DIAGNOSTICS menu. Then press and hold the left and right arrows located below the control display. Hold for 5 seconds. This will cause ALL history to be deleted. To maintain history, reset counters individually.
PAST ERRORS	
Control Fault	Displays number of control faults
Ignition Retries	Displays cumulative ignition attempts. It is recommended that his be reset during yearly maintenance by holding down the **Left** and **Right** arrows or by selecting this line and pressing the **Enter** button
Manual Reset Cnt	Displays number of manual reset lockouts since last cleared
Auto Reset Cnt	Displays number of auto reset lockouts since last cleared
Lockout History 1	Choose this to view the most recent error recorded
Fault Name	Displays the name of the fault that occurred
Fault Type	Displays the type of fault that occurred

DIAGNOSTICS menu *(continued)*

Figure 71 DIAGNOSTICS menu details (continued) (see Figure 58, page 66 for access information)

Menu/Item	Comment
Time	Displays time that lockout occurred
Date	Displays date that lockout occurred
Status	Displays what the status of the boiler was at the time of the error
Temperatures	Choose this to view the Boiler Temperatures at the time of the error
Inputs	Choose this to view the status of the Boiler Inputs at the time of the error
Outputs	Choose this to view the status of the Boiler Outputs at the time of the error
Lockout History 2	Choose this to view the second most recent error recorded
Fault Name	Displays the name of the fault that occurred
Fault Type	Displays the type of fault that occurred
Time	Displays time that lockout occurred
Date	Displays date that lockout occurred
Status	Displays what the status of the boiler was at the time of the error
Temperatures	Choose this to view the Boiler Temperatures at the time of the error
Inputs	Choose this to view the status of the Boiler Inputs at the time of the error
Outputs	Choose this to view the status of the Boiler Outputs at the time of the error
Lockout History 3	Choose this to view the third most recent error recorded
Fault Name	Displays the name of the fault that occurred
Fault Type	Displays the type of fault that occurred
Time	Displays time that lockout occurred
Date	Displays date that lockout occurred
Status	Displays what the status of the boiler was at the time of the error
Temperatures	Choose this to view the Boiler Temperatures at the time of the error
Inputs	Choose this to view the status of the Boiler Inputs at the time of the error
Outputs	Choose this to view the status of the Boiler Outputs at the time of the error

Manual Test Mode	
Status	Current operating status of the boiler. Prepurge, Ignition, Name of the system Type being satisfied, post purge, Warm Weather Shut down, Trouble
Heat Exchanger	Temperature of the heat exchanger block sensor
Target	Calculated target temperature based on outdoor temp or the max target if no ODR
Modulation	Displays what sensor the boiler is using to modulate from. If the boiler is being self-limited, this may also display what the cause is
Boiler Out	Temperature of the outlet sensor on the boiler heat exchanger
Boiler In	Temperature of the inlet sensor on the boiler heat exchanger
System Supply	Temperature of the system water after the boiler loop
System Return	Temperature of the system water returning to the boiler loop
Flue	Temperature of flue gases
Outdoor	Temperature of outdoor air
Blower Signal	Control's signal controlling the blower speed
Blower Speed	Blower's feedback to the control
Flame Signal	Number indicating the presence and quality of the flame used to shut down or boost the boiler
Force Rate	Used to manually force a rate during a call for heat. Choose auto for normal operation

Manual Reset	Reset selected condition

MAINTENANCE, DATE AND TIME menus

Figure 72 MAINTENANCE, DATE AND TIME menus — navigation (see Figure 58, page 66 for access information)

Maintenance Info	Comment
Name	Contractor name to appear in maintenance reminders and during lockouts
Phone	Contractor phone number
Model	Displays the boiler model selected in the boiler setup
CP Number	Enter the CP# of the boiler
Installed	Enter the date the boiler was installed
Last Date	Date automatically entered when Reset Reminder is chosen by contractor
Next Date	Date automatically calculated when Reset Reminder is selected by contractor
Interval Settings	Contractor selects maintenance reminder frequency based on service history
Reset Reminder	Contractor selects this to update Last maintenance Date and Next Date. Homeowner uses this to ignore the reminder and update only the Next Date.

Set Time and Date	
Year	Set year (homeowner or contractor)
Month	Set month (homeowner or contractor)
Day	Set day (homeowner or contractor)
Hour	Set hour (homeowner or contractor)
Minute	Set minute (homeowner or contractor)

MAINTENANCE INFO

1. Use this section to enter contractor's information, CP number, install date and to enter an automatic notice for maintenance (default is 12 months). Because this shows on the display, it is an automatic means of notifying the homeowner of need for scheduled maintenance by the technician. Select RESET REMINDER to reset for the next maintenance date.

SET TIME AND DATE

1. Enter current date and time. This allows correct maintenance reminder timing and provides date and time stamp for lockout histories on ERROR screen in Diagnostic Menu.

Startup — fill the system

Clean system to remove sediment

WARNING **You must thoroughly flush the system** (without boiler connected) to remove sediment. The high-efficiency heat exchanger can be damaged by buildup or corrosion due to sediment.

1. If necessary, use an approved chemical cleaning agent, following the manufacturer's guidelines for procedures.
   a. A list of approved cleaning products is available at www.Weil-McLain.com.
   b. See Replacement parts at the end of this manual for Weil-McLain part numbers to obtain cleaning agents through a Weil-McLain distributor.
2. For zoned systems, flush each zone separately through a purge valve.
   a. If purge valves and isolation valves are not already installed, install them to properly clean the system.
3. Flush the system until water runs clean and you are sure all piping is free of sediment.

WARNING **Do not** use petroleum-based cleaning or sealing compounds in the boiler system. Damage to elastomer seals and gaskets in the system could occur, resulting in substantial property damage.

Before filling the boiler and system with water, verify the water chemistry complies with these instructions.

Failure to comply could result in boiler failure or unreliable operation.

WARNING **Install a strainer or other mechanical separator device** if necessary to ensure sediment will not enter the boiler.

Water chemistry

Water pH between 7.0 and 8.5

1. Maintain boiler water pH between 7.0 and 8.5. Test the water with litmus paper or have it chemically analyzed by a water treatment company.
2. If pH differs from above, consult a local water treatment company for treatment needed.
3. Softened water may be used to fill boiler providing Sentinel X100 is added to the system at the proper dosage and properly maintained. Without Sentinel X100, softened water **must not** be used or boiler corrosion may occur.

Hardness must be less than 7 grains

1. Consult local water treatment companies for unusually hard water areas (above 7 grains hardness).

Chlorine concentration must be LESS THAN 200 ppm

1. Filling with chlorinated fresh water should be acceptable since drinking water chlorine levels are typically less than 5 ppm.
2. Do not use the boiler to directly heat swimming pool or spa water.
3. Do not fill boiler or operate with water containing chlorine in excess of 200 ppm.

Antifreeze with Inhibitor

WARNING Use only antifreeze listed by Weil-McLain as suitable for use with SlimFit Gas Boilers. See additional requirements in the antifreeze WARNING on the next page.

1. A list of approved antifreeze products is available at www.Weil-McLain.com.
2. See Replacement parts at the end of this manual for Weil-McLain part numbers to obtain antifreeze through a Weil-McLain distributor.

Use the correct amount of antifreeze

1. Determine the **freezing temperature needed** (to protect against lowest likely temperature the system water will encounter).
2. Find the **antifreeze percentage** (concentration by volume) needed for this temperature from the antifreeze manufacturer's data on the antifreeze container.

WARNING **DO NOT exceed 50% by volume** concentration of antifreeze.

3. Calculate the **total volume** (gallons) of all system piping and components, including the expansion tank and boiler.
   a. Boiler water content is listed on page 116.
   b. Include the expansion tank water content.
4. The gallons of antifreeze required equals the total water volume multiplied times the antifreeze percentage required.

Fill and test water system

1. Fill system only after ensuring the water meets the requirements of this manual.
2. Close manual and automatic air vents and boiler drain valve.
3. Fill to correct system pressure. Correct pressure will vary with each application.
   a. Pressure will rise when boiler is turned on and system water temperature increases.
   b. Operating pressure should be no higher than 80% of the relief valve setting for most systems.
4. At initial fill and during boiler startup and testing, check the system thoroughly for any leaks. Repair all leaks before proceeding further.

WARNING **Eliminate all system leaks**. Continual fresh make-up water will reduce boiler life. Minerals can build up in sections, reducing heat transfer, overheating heat exchanger, and causing heat exchanger failure.

Purge air from water system

1. Connect a hose to the purge valve (see purge/drain valves shown in piping diagrams beginning on page 16). Route the hose to an area where water can drain and be seen.
2. Close the boiler or system isolation valve between the purge valve and fill connection to the system.
3. Close zone isolation valves.
4. Open quick-fill valve on cold water make-up line.
5. Open purge valve.

Startup — fill the system *(continued)*

⚠WARNING FREEZE PROTECTION *(when used)*

Follow these guidelines to prevent possibility of severe personal injury, death or substantial property damage:

- **NEVER use automotive or standard glycol antifreeze, even glycol made for hydronic systems**. Use only freeze-prevention fluids recommended by Weil-McLain for application in SlimFit Boiler systems.
- **Thoroughly flush any system that has used glycol** before installing the new SlimFit boiler.
- **Review the material safety data sheet (MSDS)** for the fluid used with the boiler owner and leave a copy for reference. The MSDS contains information on potential hazards and first aid procedures for exposure or ingestion.
- **Check antifreeze inhibitor level at least annually**. Glycol concentration and inhibitor levels may change over time. Add antifreeze to increase concentration if necessary. Add inhibitor as needed to bring to acceptable level, using inhibitor test kit to verify.
- When using freeze protection fluid with automatic fill, **install a water meter to monitor water make-up**. Freeze protection fluid may leak before the water begins to leak, causing concentration to drop, reducing the freeze protection level.
- **DO NOT exceed 50% antifreeze by volume**. Antifreeze moves more sluggishly than water and can interfere with heat transfer. At antifreeze concentrations higher than 50%, sludge can develop in the boiler, potentially causing damage to the heat exchanger.
- **Clean the system before filling**. Always drain and flush the system thoroughly before filling with antifreeze. Sludge, iron oxide deposits and other sediment in the system inhibit flow and can cause rapid breakdown of inhibitors.
- Use only antifreeze recommended by Weil-McLain.

NOTICE Weil-McLain provides information for application of the antifreeze products listed in this document only for use in Weil-McLain SlimFit boilers. Do not apply these products or instructions for other applications. Local codes may require a backflow preventer or actual disconnection from city water supply.

6. One zone at a time, open the isolation valves. Allow water to run through the zone, pushing out the air. Run until no noticeable air flow is present. Close the zone isolation valves and proceed with the next zone. Follow this procedure until all zones are purged.
7. Close the quick-fill water valve and purge valve and remove the hose. Open all isolation valves. Watch that system pressure rises to correct cold-fill pressure.
8. After the system has operated for a while, eliminate any residual air by using the manual air vents located throughout the system.
9. If purge valves are not installed in system, open manual air vents in system one at a time, beginning with lowest floor. Close vent when water squirts out. Repeat with remaining vents.
10. Open automatic air vent (diaphragm-type or bladder-type expansion tank systems only) one turn.
11. Starting on the lowest floor, open air vents one at a time until water squirts out.
12. Repeat with remaining vents.
13. Refill to correct pressure.

⚠WARNING X100 inhibitor is recommended

1. It is recommended that the SlimFit boiler have Sentinel X100 added to the system to prevent damage to the boilers' heat exchanger. See Replacement Parts section at the end of this manual for re-ordering information.
2. After filling the system as directed in these instructions, use a caulking gun to inject the X100 inhibitor concentrate into the system, or fill with the X100 in its liquid form, following the instructions on the tube or container.
3. After adding the inhibitor to the system, allow time for the water to circulate and mix. Then check the inhibitor level. Add additional inhibitor if necessary.
4. See separate instructions or Weil-McLain website for suggested guidelines to determine how much inhibitor to use.

Check/verify water chemistry

1. The system may have residual substances that could affect water chemistry.
2. After the system has been filled and leak tested, verify water pH and chlorine concentrations are acceptable.
3. Verify antifreeze concentration, when used.
4. Follow the instructions on the Sentinel test kit to sample the system water and verify inhibitor concentration.

Check inhibitor and antifreeze concentrations annually

1. Test the pH of a sample of system water at least annually.
   a. The pH of the water mixture must be between 7.0 and 8.5.
   b. Or use the Sentinel inhibitor test kit to check concentration.
2. If pH is outside this range (or inhibitor test kit indicates low level), the inhibitor level may not be sufficient to prevent corrosion.
3. Test antifreeze concentration.

⚠WARNING Test antifreeze concentration at least annually. If concentration is low, add antifreeze or drain system and refill with correct mixture. Follow instructions on page 79 to determine amount of antifreeze needed.

4. Check inhibitor level after adjustments are made.

Startup — final checks

Check thermostat circuit(s)

1. Disconnect the two external wires connected to the boiler thermostat terminals (see instructions beginning on page 47 for terminal locations).
2. Connect a voltmeter across these two incoming wires. Close each thermostat, zone valve and relay in the external circuit one at a time and check the voltmeter reading across the incoming wires.

⚠WARNING There should NEVER be a voltage reading. Applying voltage across the thermostat terminals will damage the control. If a voltage does occur under any condition, check and correct the external wiring. (This is a common problem when using 3-wire zone valves.)

3. Once the external thermostat circuit wiring is checked and corrected if necessary, reconnect the external thermostat circuit wires. Allow the boiler to cycle.

Inspect/fill condensate system

Inspect/check condensate lines and fittings

1. Inspect the condensate drain line and condensate trap. (See page 44 for component locations.)

Fill condensate trap with water

1. Fill the condensate trap with fresh water, either by removing, filling and re-installing or by pouring water into the inspection caps near the flue connection (piping end of boiler).
2. **To remove the trap**, see page 44 for information.
   a. Loosen the two stainless steel hose clamps on the flexible coupling
   b. Slide the flexible coupling over the 1" PVC pipe connected to the trap.
   c. Loosen the condensate trap inlet connection.
   d. Remove condensate trap and flush as needed.

⚠WARNING The condensate trap must be filled with water during all times of boiler operation to avoid flue gas emission from the condensate drain line. Failure to fill the trap could result in severe personal injury or death.

Inspect pressure switch hoses

⚠WARNING The pressure switch sense lines must be in good condition and firmly attached to the correct locations. Incorrect placement or disconnected sense lines can result in unreliable boiler operation.

1. Inspect all pressure switch sense hoses and verify that they are correctly installed (Figure 73). Replace if necessary.
2. Inspect and verify attachment of the plastic gas valve/venturi reference line (Figure 81, page 90). Replace if necessary.

Final checks before starting boiler

❑ Read the instructions to adjust and set up the control module. Verify that all settings have been made correctly.

Figure 73 Pressure switches

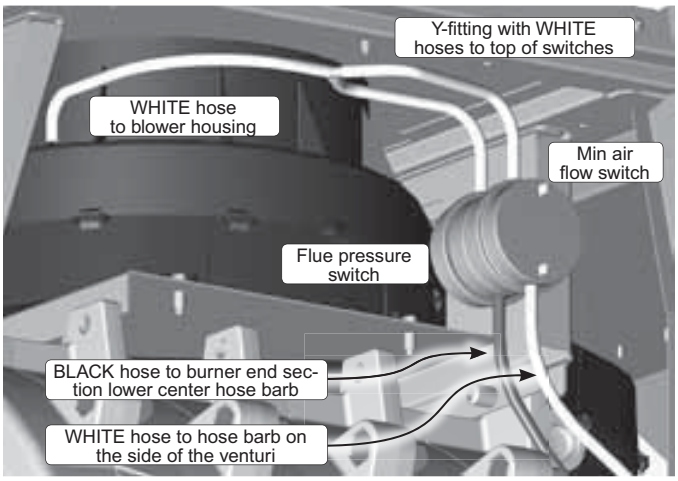

❑ Verify that the boiler and system are full of water and all system components are correctly set for operation.

❑ Vent any remaining air from system using manual vents. Air in the system will interfere with circulation and cause heat distribution problems and noise.

❑ Check system piping for leaks. If found, shut down boiler and repair immediately.

⚠WARNING **Eliminate all system leaks**. Continual fresh make-up water will reduce boiler life. Minerals can build up in sections, reducing heat transfer, overheating heat exchanger, and causing heat exchanger failure.

❑ Fill condensate trap with water (see above for procedure).

❑ Verify electrical connections are correct and securely attached.

❑ Inspect vent piping and air piping (direct vent systems) for signs of deterioration from corrosion, physical damage or sagging. Verify vent piping and air piping are intact and correctly installed per this manual.

⚠WARNING Venting system must be sealed gas-tight to prevent flue gas spillage and carbon monoxide emissions which will result in severe personal injury or death.

⚠WARNING Before starting the boiler, and during initial operation, use a leak detector or smell near the floor and around the boiler for gas odorant or any unusual odor. Remove boiler access door and smell interior of boiler enclosure. Do not proceed with startup if there is any indication of a gas leak. Repair any leak at once.

If you discover evidence of any gas leak during operation, shut down the boiler at once. Find the leak source with bubble test and repair immediately. Do not start boiler again until corrected. Failure to comply could result in severe personal injury, death or substantial property damage.

Startup procedure

Figure 74 Blower speed — required settings (High altitude means installations above 5,500 feet)

Boiler	Low fire		Ignition		High fire	
	Factory setting (rpm)	High altitude (rpm)	Factory setting (rpm)	High altitude (rpm)	Factory setting (rpm)	Maximum setting (rpm)
SF1000	1300	1600	2200	2900	5200	5400
SF1500	1200	1500	2300	3000	4900	5100
SF2000	1025	1350	1600	2100	4300	4500

To start the boiler

1. Turn OFF the boiler ON/OFF switch.
2. Read and follow the Operating Instructions, Figure 78, page 85.
3. The control will initialize and follow its sequence of operation (see page 62).

If boiler does not start correctly

1. Check for loose connections, blown fuse or service switch off?
2. Is external limit control (if used) open? Is boiler water temperature above 200 °F?
3. Is thermostat set below room temperature?
4. Is gas turned on at meter or boiler?
5. Is incoming gas pressure greater or less than required on page 45?
6. Are parameters set correctly as per this manual?
7. Is the warm weather shutdown activated?
8. If none of the above corrects the problem, refer to Troubleshooting, beginning on page 93.

Check flame & combustion with instruments

1. Initiate a call for heat on one of the heat demand inputs.
2. Access the Control installer menus by pressing and holding the UP and DOWN arrow keys for five seconds.
3. Use the Control display to navigate DIAGNOSTICS to Manual test mode (see page 92 for proper instructions on forcing rates during Manual Test Mode) and force the firing rate to High (high fire).
4. Look at the flame through the flame inspection window. The high fire flame should be blue and should be stable. The burner surface should be covered with orange dots.
5. Remove the flue temperature sensor from the flue pipe and insert a combustion test probe., using a calibrated combustion test instrument.
6. Test for CO_2 (or O_2) and for CO. The CO_2 values are listed in Figure 75, page 83. If results are acceptable, proceed to step 7. IF NOT, follow the instructions under "**Gas valve adjustment procedure**" to set the CO_2 values. See WARNING in next column.

WARNING You must re-install the flue gas sample port cover to prevent flue gas spillage into the boiler room. Failure to comply could result in severe personal injury, death or substantial property damage.

Gas valve adjustment procedure

WARNING DO NOT attempt to adjust the gas valve settings unless you are a qualified technician, and with the use of calibrated combustion test instruments. Adjust the valve settings only as needed to meet the combustion values given in Figure 75, page 83.

1. This procedure is only necessary when combustion tests indicate the need, as explained under "**Check flame & combustion with instruments**, page 82."
2. Boiler behavior that might indicate a need to check combustion values at high fire (as per page 82) to verify boiler is in adjustment include: difficulty igniting, poor flame stability at low fire, combustion noise or high carbon monoxide values.
3. Combustion readings must be taken at both high fire and low fire.

Adjust valve at high fire

1. Use the Control display to navigate to Manual test mode. (See page 92 for proper instructions on forcing rates during Manual Test Mode). After the boiler has had time to stabilize and high-fire RPM value (see Figure 74) is reached, take a CO_2 reading.
   a. See Figure 76, page 83 to adjust if necessary.
   b. Remove the blue cover on the throttle screw opening with a straight-bit screwdriver.

NOTICE Make only small (1/8 -turn) throttle screw adjustments. Adjustment can be sensitive, especially on propane. Navigate to DIAGNOSTICS — Manual test mode (see page 92 for proper instructions on testing).

   c. If the CO_2 is HIGH, turn the throttle screw CLOCKWISE with a 3mm Allen wrench to lower the input. Allow the boiler to stabilize and take another reading. Continue until the desired CO_2 value is achieved.
   d. If the CO_2 is LOW, turn the throttle screw COUNTERCLOCKWISE to increase the input. Allow the boiler to stabilize and take another reading. Continue until the desired CO_2 value is achieved.

   e. Re-install the blue cover on the gas valve.

Adjust valve at low fire

1. Lock the boiler into low fire using the Control module screen. Verify that the blower rpm value is correct for low fire (see Figure 74, page 82).
2. Check the combustion readings.
3. If results are acceptable at low fire, verify high fire readings again. Restore firing rate to AUTO.
4. If combustion results are not acceptable, remove the cover screw over the offset adjustment (see Figure 76, page 83). Navigate to DIAGNOSTICS — Manual test mode (see page 92 for proper instructions on testing).
5. Use a T40 Torx driver to adjust the setting. Rotate clockwise to increase CO_2, rotate counterclockwise to decrease CO_2. Re-install the cover screw when completed.
6. Consult your local Weil-McLain representative if acceptable results cannot be obtained for both high and low fire.

Startup procedure *(continued)*

WARNING If combustion at either high or low fire is outside the range given in Figure 75, follow the procedure given for adjusting the throttle screw on the gas valve. If throttle screw adjustment does not correct the problem, then shut down the boiler and contact your local Weil-McLain representative. Throttle screw adjustment must be done only by a qualified technician, using calibrated test instruments. Failure to comply could result in severe personal injury, death or substantial property damage.

Figure 75 Acceptable CO_2 and CO values

Boiler	High fire		Low fire	
	$\%CO_2$ Note 1	CO ppm	$\%CO_2$ Note 2	CO ppm
SF1000	9.00	< 60	8.75	< 60
SF1500	9.00	< 60	8.75	< 60
SF2000	9.00	< 60	8.75	< 60
Note 1	The high fire CO_2 listed is typical. The value may vary with conditions, but must not be lower than 8.5% nor higher than 10.0%.			
Note 2	The low fire CO_2 listed is typical. The value may vary with conditions, but must not be higher than the high fire CO_2 nor more than 0.5% less than the high fire CO_2.			

Figure 76 Gas valve adjustment locations ***(ONLY for use by a qualified technician, using calibrated combustion test instruments)***

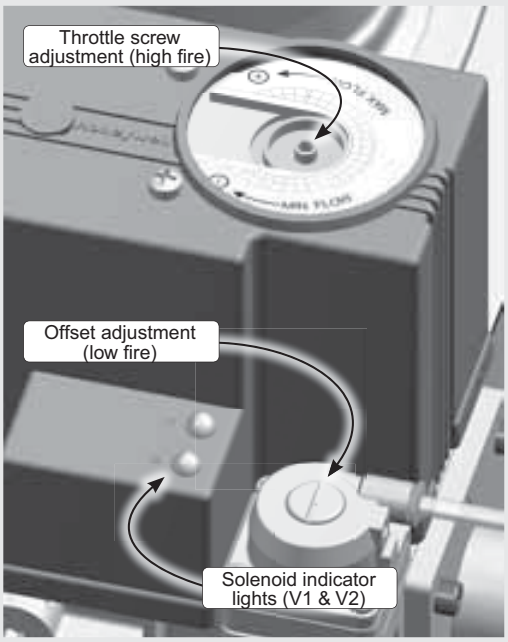

Adjust and test boiler controls

1. Follow instructions in this manual to set and verify operation of the boiler controls.

Check ignition system safety shutoff device

1. After the boiler has been installed, turn off the boiler.
2. Shut off the manual gas valve located on the gas line to stop flow of fuel to the boiler.
3. Turn on the boiler. It will start the ignition sequence, but will not light. After some time, the boiler will lockout, the display screen will turn red, and the Control will flash "Ignition Fault". It means that the boiler tried to ignite without success for five (5) times and went into Lockout mode. This means that the ignition system safety device worked properly.
4. Clear the Lockout condition by selecting "Manual Reset" in the Diagnostic Menu.
5. Open the manual gas valve located on the gas line to resume fuel supply to the boiler.

Gas valve leakage testing

WARNING DO NOT connect a manometer to the manual gas valve or the automatic gas valve. The high vacuum from the blower could pull fluid into the gas line, possibly damaging the gas valves.

1. Refer to the gas valve manufacturer's instructions for the procedure to test the valve.
2. To operate the two valve solenoids independently, navigate to the Valve Test Screen on the Control (see Figure 57, page 65 for access sequence).

Figure 77 Gas valve test pressure tapping

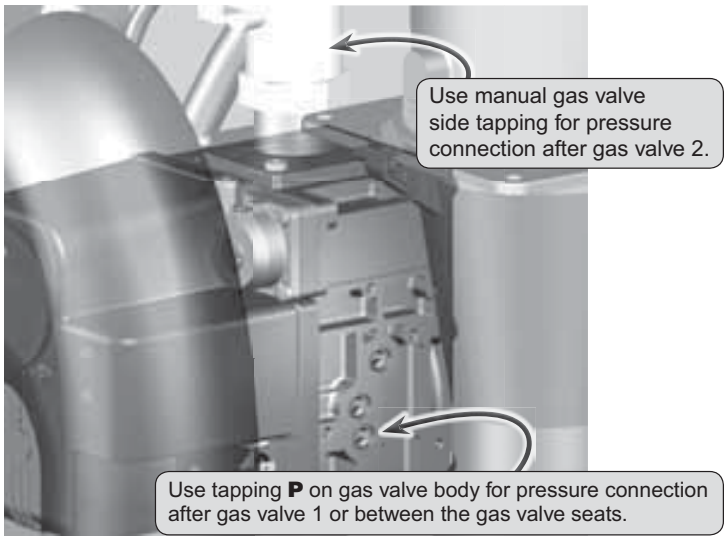

3. When in the Gas Valve Test Screen, you will see two options:
   a. Open Gas Valve 1
   b. Open Gas Valve 2
4. To open only gas valve 1, highlight it and press enter/save.
5. While still in the Gas Valve test screen, give the boiler a call for heat. The boiler will go through it's normal Ignition sequence, but will only open Gas Valve 1.

Startup procedure *(continued)*

6. After gas valve 1 has opened, end the call for heat.
7. This procedure can be repeated by selecting and entering Open Gas Valve 2.
8. After the testing is complete and the call for heat has been removed, use the back button to exit the Gas Valve Test Screen. This will then reset the control to open both Gas Valves for any call for heat.

Check gas input rate

1. Measure natural gas input:
   a. Operate boiler 10 minutes.
   b. Turn off other appliances.
   c. At natural gas meter, measure time (in seconds) required to use one cubic foot of gas.
   d. Calculate gas input:

$$\frac{3600 \times 1000}{\text{number of seconds from step } \mathbf{c}} = \text{Btuh}$$

   e. Btuh calculated should approximate input rating on boiler rating label.
2. Use the Control display to navigate to Manual test mode (see Figure 68, page 74) and force the firing rate to Low (low fire).
3. Look at the flame through the flame inspection window. The low fire flame should be stable and evenly distributed over burner surface with a uniform orange color.
4. Repeat the combustion test of steps 5 and 6 above.
5. Use the Control display to navigate to Manual test mode (see Figure 68, page 74) and force the firing rate to AUTO (normal operation).
6. Re-install the flue gas temperature sensor.

Verification check list

- ❑ Verified that the control is programmed correctly?
- ❑ Verified that boiler and heat distribution units filled with water?
- ❑ Verified water chemistry per page 79?
- ❑ Automatic air vents, if used, opened one full turn?
- ❑ Air purged from system?
- ❑ Air purged from gas piping? Piping checked for leaks?
- ❑ Filled condensate trap with water?
- ❑ Thermostat circuit wiring checked to ensure there are no stray voltages?
- ❑ Followed Operating Instructions, Figure 78, page 85.
- ❑ Burner flame and combustion verified per page 82?
- ❑ Verified control operation for space heating and DHW (if used) per this manual?
- ❑ Tested additional field-installed controls? Verified controls cause automatic reset or manual reset lockout as desired.
- ❑ Set additional field-installed limit control(s) to system temperature requirements?
- ❑ Adjusted balancing valves and controls to provide design temperature to system?
- ❑ For multiple zones, adjusted for correct flow in each zone?
- ❑ Verified thermostat heat anticipator (if available) set properly (see page 51 for requirements)?
- ❑ Cycled boiler with thermostat (and with DHW aquastat, if installed) — Raised to highest setting and verified boiler goes through normal startup cycle? Lowered to lowest setting and verified boiler goes off?
- ❑ Measured natural gas input?
- ❑ Checked incoming gas pressure as specified on page 45.
- ❑ Observed several operating cycles for proper operation.
- ❑ Set room thermostat to desired room temperature (and DHW aquastat, if installed, to desired DHW storage temperature)?
- ❑ Reviewed all instructions shipped with this boiler with owner or maintenance person?
- ❑ Filled in **Installation certificate** on page 117?
- ❑ Filled out the warranty registration card and send to Weil-McLain?
- ❑ Return instructions to envelope and give to owner or place inside boiler housing. Instructions must be available for all service and adjustment of the boiler.

Startup procedure *(continued)*

Figure 78 Operating instructions (WARNING — Verify that the control is set correctly before proceeding.)

FOR YOUR SAFETY READ BEFORE OPERATING

WARNING **If you do not follow these instructions exactly, a fire or explosion may result causing property damage, personal injury or loss of life.**

A. This appliance does not have a pilot. It is equipped with an ignition device which automatically lights the burner. Do not try to light the burner by hand.

B. Before OPERATING, smell all around the appliance area for gas. Be sure to smell next to the floor because some gas is heavier than air and will settle on the floor. See below.

C. Use only your hand to turn the gas valve handle. Never use tools. If the handle will not turn by hand, don't try to repair it, call a qualified service technician. Force or attempted repair may result in a fire or explosion.

D. Do not use this appliance if any part has been under water. Immediately call a qualified service technician to inspect the appliance and to replace any part of the control system and any gas control, which has been under water.

WHAT TO DO IF YOU SMELL GAS

- Do not try to light any appliance.
- Do not touch any electric switch; do not use any phone in your building.
- Immediately call your gas supplier from a neighbor's phone. Follow the gas supplier's instructions.
- If you cannot reach your gas supplier, call the fire department.

OPERATING INSTRUCTIONS

1. Stop! Read the safety information at left on this label. This appliance is equipped with an ignition device which automatically lights the burner. Do not try to light the burner by hand.
2. Set room thermostat(s) to lowest setting. Verify external manual gas cock is open (valve handle parallel to gas piping).
3. Turn OFF all electrical power to the appliance.
4. Remove boiler access door by lifting up.
5. Turn boiler manual gas valve handle counterclockwise ↶ to open gas supply.
6. Wait five (5) minutes to clear out any gas. Then smell for gas, including near the floor. If you smell gas, STOP! Follow "B" in the safety information to the left. If you don't smell gas, go to the next step.
7. Turn ON all electrical power to the appliance.
8. Set thermostat(s) to desired setting.
9. The display will show symbols and text describing the status of the boiler as it proceeds through its operating sequence.
10. If the appliance will not operate when there is a call for heat and piping is not hot, follow the instructions "To Turn Off Gas To Appliance" below and call your service technician or gas supplier.

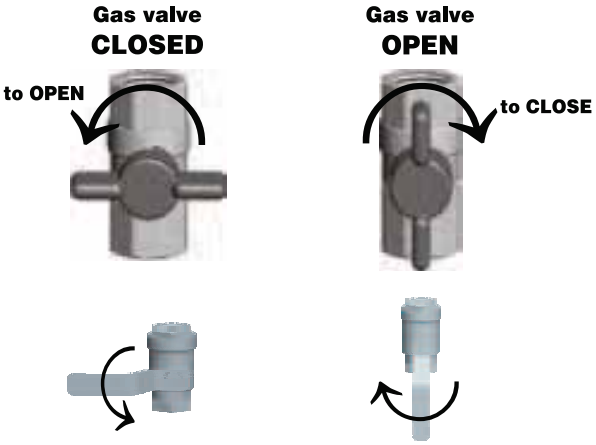

11. Reinstall boiler access door. Make sure panel is seated firmly in place.

TO TURN OFF GAS TO THE APPLIANCE

1. Set room thermostats to lowest setting.
2. Turn OFF all electrical power to the appliance.
3. Close external manual gas cock (valve handle perpendicular to gas piping). Remove boiler access door. Turn boiler manual gas valve handle clockwise ↷ to close gas supply.
4. Reinstall boiler access door.

550-101-262 (0513)

Annual startup and maintenance schedule

Figure 79 Service and maintenance schedules

Service technician

(see following pages for instructions)

ANNUAL START-UP (See First-year special inspection)

General:

Investigate reported problems.

Inspect air inlet box screen; clean and vacuum if necessary; WARNING — no solvents.

Clean base collector and condensate trap and fill with fresh water.

Check for leaks (water, gas, flue, condensate).

Check system water chemistry, inhibitor level and antifreeze concentration, if used.

Check boiler relief valve.

Verify flue and air lines in good condition and sealed tight.

Check system water pressure/system piping/expansion tank.

Ignition electrode and flame sense rods (inspect, clean and check spacings).

Ignition and ground wiring.

Check control function/settings:

- High gas pressure switch
- Low gas pressure switch
- Low water cut off
- Operating and high limits

Wiring and connections.

Perform startup checkout and performance verification beginning with Startup — fill the system, page 79.

Flame inspection (stable, uniform).

Flame signal.

Clean heat exchanger if flue temp is more than 30°F above return water temp.

Check blower speed settings.

Additional if combustion or performance indicate need:

Clean heat exchanger.

Remove and clean burner using compressed air only.

Vacuum the blower.

Review:

Review with owner.

Owner maintenance

(see SlimFit User's Information Manual for instructions)

Daily	• Check boiler area. • Check air openings. • Check pressure/temperature gauge.
Monthly	• Check vent piping. • Check air piping. • Check relief valve. • Check condensate drain system. • Check automatic air vents (if used).
Periodically	• Test low water cutoff by pressing test button.
Every 6 months	• Check boiler piping (gas and water). • Operate relief valve.
End of season	• Shut boiler down (unless boiler used for domestic water).

WARNING Follow the service and maintenance procedures given throughout this manual and in component literature shipped with the boiler. Failure to perform the service and maintenance could result in damage to the boiler or system. Failure to follow the directions in this manual and component literature could result in severe personal injury, death or substantial property damage.

Annual startup

HANDLING CERAMIC FIBER MATERIALS

REMOVAL OF SIGHT GLASS GASKET

WARNING The sight glass gasket in this product contains ceramic fiber materials that have been identified as carcinogenic, or possibly carcinogenic, to humans. Ceramic fibers can be converted to cristobalite in very high temperature applications. The International Agency for Research on Cancer (IARC) has concluded, "Crystalline silica inhaled in the form of quartz or cristobalite from occupational sources is carcinogenic to humans (Group 1).":

- ❑ Avoid breathing dust and contact with skin and eyes.
  - Use NIOSH certified dust respirator (N95). This type of respirator is based on the OSHA requirements for cristobalite at the time this document was written. Other types of respirators may be needed depending on the job site conditions. Current NIOSH recommendations can be found on the NIOSH web site at http://www.cdc.gov/niosh/homepage.html. NIOSH approved respirators, manufacturers, and phone numbers are also listed on this web site.
  - Wear long-sleeved, loose fitting clothing, gloves, and eye protection.
- ❑ Apply enough water to the sight glass gasket to prevent airborne dust.
- ❑ Remove sight glass gasket from the boiler and place it in a plastic bag for disposal.
- ❑ Wash potentially contaminated clothes separately from other clothing. Rinse clothes washer thoroughly.

NIOSH stated First Aid

- ❑ Eye: Irrigate immediately
- ❑ Breathing: Fresh air.

FIRST-YEAR SPECIAL INSPECTION

1. **No later than 12 months** after the boiler is installed, perform a first-year inspection of the boiler. This must include the following **in addition to routine annual start-up procedures**.
   a. Remove the heat exchanger cover plate. Inspect the heat exchanger and clean if necessary. See instructions for removing and replacing the heat exchanger cover plate, and for cleaning the heat exchanger, in the Maintenance section of this manual.
   b. Make sure the burner is clean.
   c. Make sure the burner gasket is in good condition. Replace if necessary.
   d. Disconnect condensate trap and drain lines. Inspect, then flush thoroughly.
2. Determine follow-up maintenance and service needs based on the condition of the heat exchanger and condensate lines.
   a. If the heat exchanger shows substantial fouling, or if condensate lines show accumulation of sediment, schedule a follow-up service call to perform the first-year inspection again, sooner than the normal twelve months between.
   b. Heavy fouling of the exchanger or condensate lines indicates possible combustion air contamination. Inspect the air intake area carefully, and remove possible contaminants. See " Corrosive contaminants and sources," Figure 21, page 24, for products to avoid.

WARNING You must eliminate causes of corrosion and contamination to ensure reliable operation of the boiler and system.

Annual startup *(continued)*

WARNING The boiler should be inspected and started annually, at the beginning of the heating season, only by a qualified service technician. In addition, the maintenance and care of the boiler designated in Figure 79, page 86 and explained on the following pages must be performed to assure maximum boiler efficiency and reliability. Failure to service and maintain the boiler and system could result in equipment failure.

WARNING Electrical shock hazard — Turn off power to the boiler before any service operation on the boiler except as noted otherwise in this instruction manual. Failure to turn off electrical power could result in electrical shock, causing severe personal injury or death.

WARNING Do not use solvents to clean any of the boiler components. The components could be damaged, resulting in unreliable or unsafe operation.

Address reported problems

1. Inspect any problems reported by owner and correct before proceeding.

Inspect boiler area

1. Verify that boiler area is free of any combustible materials, gasoline and other flammable vapors and liquids.
2. Verify that air intake area is free of any of the contaminants listed on page 24 of this manual. If any of these are present in the boiler intake air vicinity, they must be removed. If they cannot be removed, reinstall the air and vent lines per this manual and the SlimFit Boiler Vent Supplement.

Inspect air inlet box screen

1. Direct vent installations — Remove the cover from the air pipe connection inspection tee (in installed) or remove air piping as necessary to access the inlet box.
2. If unable to look directly down into the air inlet box (Figure 80), use an inspection mirror.
3. Thoroughly inspect the air inlet screen.
4. If debris has collected on the air inlet screen, use a vacuum to remove accumulation. Brush with a soft brush if necessary to loosen material.
5. Direct vent installations — Re-install the cover on the air pipe connection tee when complete.
6. Direct Exhaust installations – Inspect and clean screen as needed.

Clean the condensate trap

1. Inspect the condensate trap. If the reservoir or trap portion has debris accumulated, remove the trap and clean.
2. To remove, see page 44 for information.

Figure 80 Air inlet box screen

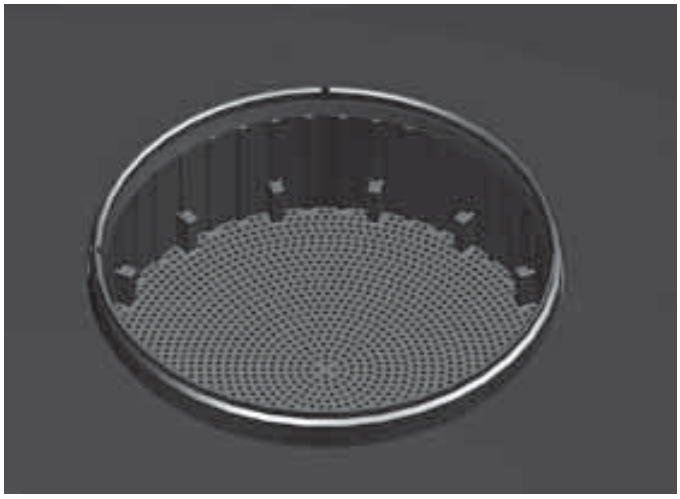

3. Loosen the two stainless steel hose clamps on the flexible coupling
4. Slide the flexible coupling over the 1” PVC pipe connected to the trap.
5. Loosen the condensate trap inlet connection.
6. Remove condensate trap and flush as needed.
7. Fill condensate trap with fresh water before re-installing or re-install the trap and fill using the inspection caps near the flue connection (piping end of boiler).
8. Ensure the condensate line gasket is in place. Then tighten the condensate trap inlet connection clamp nut securely by hand.
9. Slide the flexible coupling back into place, connecting the condensate trap and the condensate drain piping.
10. Tighten the stainless steel hose clamps to secure the flexible coupling in place.
11. Verify that all the connections are made with no leaks to complete installation.

Check all piping for leaks

WARNING Eliminate all system or boiler leaks. Continual fresh make-up water will reduce boiler life. Minerals can build up in sections, reducing heat transfer, overheating heat exchanger, and causing heat exchanger failure. Leaking water may also cause severe property damage.

1. Inspect all water and gas piping and verify to be leak free.
2. Look for signs of leaking lines and correct any problems found.
3. Check gas line using procedure on page 45.

Check air openings

1. Verify that combustion and ventilation air openings to the boiler room and/or building are open and unobstructed. Check operation and wiring of automatic combustion air dampers, if used.
2. Verify that boiler vent discharge and air intake are clean and free of obstructions.

Annual startup *(continued)*

Flue vent system and combustion air piping

1. Visually inspect entire flue gas venting system (and air piping, if installed) for blockage, deterioration or leakage. Repair any joints that show signs of leakage in accordance with vent manufacturer's instructions. When air is ducted to boiler, verify that air inlet pipe is connected and properly sealed.

WARNING Failure to inspect for the above conditions and have them repaired can result in severe personal injury or death.

Check water system

1. Verify all system components are correctly installed and operational.
2. Check the cold fill pressure for the system. Verify it is correct (usually around 12 psig).
3. Watch the system pressure as the boiler heats up (during testing) to ensure pressure doesn't rise too high. Excessive pressure rise indicates expansion tank sizing or performance problem.
4. Inspect automatic air vents and air separators. Remove air vent caps and briefly press push valve to flush vent. Reinstall caps. Make sure vents do not leak. Replace any leaking vents.
5. Check system water chemistry (inhibitor concentration, pH and hardness). See page 79.

Check boiler relief valve

1. Inspect the relief valve and lift the lever to verify flow as in the following warnings, excerpted from a relief valve manufacturer's warning label. Before operating any relief valve, ensure that it is piped with its discharge in a safe area to avoid severe scald potential. Read manual section 3, page 12, before proceeding further.
2. If the relief valve weeps or will not seat properly, replace the relief valve. Ensure that the reason for relief valve weeping is the valve and not over-pressurization of the system due to expansion tank waterlogging or under-sizing.

WARNING Safety relief valves should be reinspected AT LEAST ONCE EVERY THREE YEARS, by a licensed plumbing contractor or authorized inspection agency, to ensure that the product has not been affected by corrosive water conditions and to ensure that the valve and discharge line have not been altered or tampered with illegally. Certain naturally occurring conditions may corrode the valve or its components over time, rendering the valve inoperative. Such conditions are not detectable unless the valve and its components are physically removed and inspected. This inspection must only be conducted by a plumbing contractor or authorized inspection agency — not by the owner. Failure to reinspect the boiler relief valve as directed could result in unsafe pressure buildup, which can result in severe personal injury, death or substantial property damage.

WARNING Following installation, the valve lever must be operated AT LEAST ONCE A YEAR to ensure that waterways are clear. Certain naturally occurring mineral deposits may adhere to the valve, rendering it inoperative. When manually operating the lever, water will discharge and precautions must be taken to avoid contact with hot water and to avoid water damage. Before operating lever, check to see that a discharge line is connected to this valve directing the flow of hot water from the valve to a proper place of disposal. Otherwise severe personal injury may result. If no water flows, valve is inoperative. Shut down boiler until a new relief valve has been installed.

Check expansion tank

1. Expansion tanks provide space for water to move in and out as the heating system water expands due to temperature increase or contracts as the water cools. Tanks may be open, closed or diaphragm or bladder type. See section 3 of this manual for suggested best location of expansion tanks and air eliminators.
   - Open-type — located above highest radiator or baseboard unit, usually in the attic or closet. Has a gauge glass and overflow pipe to a drain.
   - Closed-type — welded gas tight and located above boiler. Tank is partially filled with water, leaving an air cushion for expansion.
     - Make sure this type of tank is fitted with a tank fitting, such as the B & G Tank-Trol or Taco Taco-Trol. This fitting reduces gravity circulation of air-saturated tank water back to the system and prevents the air from bubbling up through the water as it returns from the system.
     - Do not use automatic air vents in systems with closed-type tanks. The air will escape from the system instead of returning to the tank. Eventually, the tank will waterlog and no longer control pressurization. The boiler relief valve will weep frequently.
   - **Diaphragm- or bladder-type** — welded gas tight with a rubber membrane to separate the tank pressurizing air and the water. May be located at any point in the system, but most often found near the boiler.
     - Systems with this type of expansion tank require at least one automatic air vent, preferably located on top of an air eliminator, as shown in examples in this manual.
2. If relief valve has tended to weep frequently, the expansion tank may be waterlogged or undersized.
   - **Closed-type tank** — tank is most likely waterlogged. Install a tank fitting if not already installed. Then check fill level per fitting manufacturer's instructions. If fill level is correct, check tank size against manufacturer's instructions. Replace with a larger tank if necessary.
   - **Diaphragm- or bladder-type** — first, check tank size to be sure it is large enough for the system. If size is too small, add additional tank (or tanks) as necessary to provide sufficient expansion. If tank size is large enough, remove tank from system and check charge pressure (usually 12 psig for residential applications). If tank won't hold pressure, membrane has been damaged. Replace tank.

Annual startup *(continued)*

Inspect ignition electrode

1. Remove the ignition electrode from the boiler heat exchanger burner end section. See image at right. Ignition electrode is longer than the flame sensor (see below) and has a brown ceramic insulator.
2. Remove any white oxides accumulated on the ignition electrode using steel wool. If the ignition electrode cannot be cleaned satisfactorily, replace ignitor with a new one.
3. Reinstall ignition electrode, making sure gasket is in good condition and correctly positioned.
4. Replace gasket if necessary.
5. Make sure the ignition electrode ground wire is under the top screw that secures the ignitor to the casting.

WARNING The ignition electrode must be installed on the burner end section. The flame sensor must be installed on the piping end section. Installing these components in the wrong locations could cause poor ignitions and lockout, resulting in loss of heat.

Check ignition wiring

1. Check ignition cable electrical resistance. A good cable will have resistance between 900 and 1000 ohms. Replace if not acceptable.
2. Inspect boiler ground wire from ignition electrode to ground terminal strip.
3. Verify all wiring is in good condition and securely attached.
4. Check ground continuity of wiring using continuity meter.
5. Replace ground wires if results are not satisfactory.

Inspect flame sense assembly

1. Remove the flame sensor assembly from the boiler heat exchanger piping end section. See image at right. Flame sensor insertion length is shorter than the ignition electrode (see above) and has a pink ceramic insulator.
2. Remove any white oxides accumulated on the flame sense rods using steel wool. If the flame sense rods cannot be cleaned satisfactorily, replace flame sense assembly with a new one.
3. Reinstall flame sense assembly, making sure gasket is in good condition and correctly positioned.
4. Replace gasket if necessary.
5. Inspect the flame sense harness and connections. Replace if necessary. See WARNING above about flame sensor location.

Check all boiler wiring

1. Inspect all boiler wiring, making sure wires are in good condition and securely attached.

Check control settings

1. Use the display to navigate through all settings. Adjust settings if necessary.
2. Check settings of external limit controls (if any) and adjust if necessary.

Figure 81 Gas valve and venturi

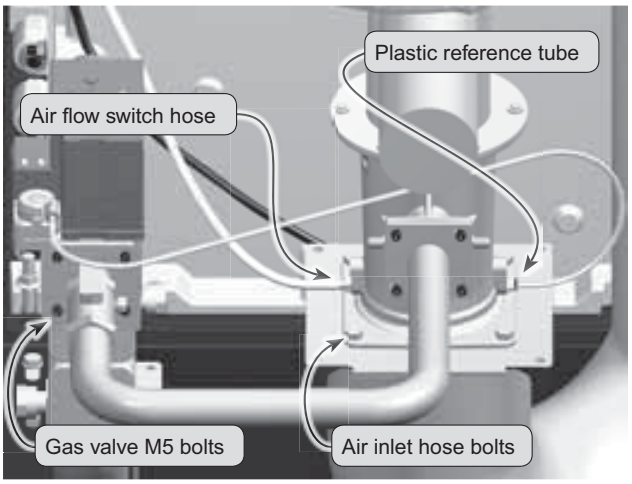

Figure 82 Burner access

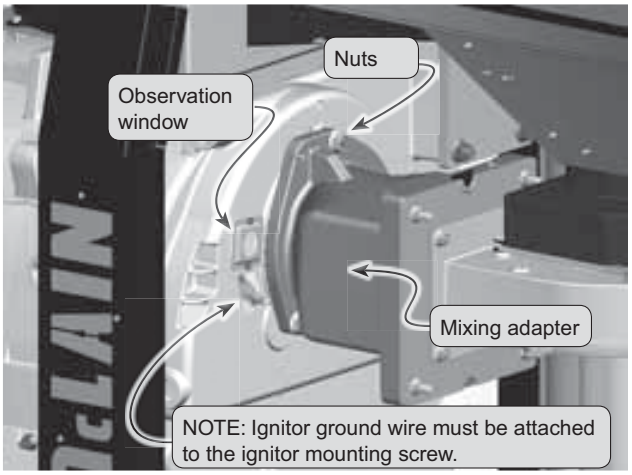

Figure 83 Burner removal and replacement

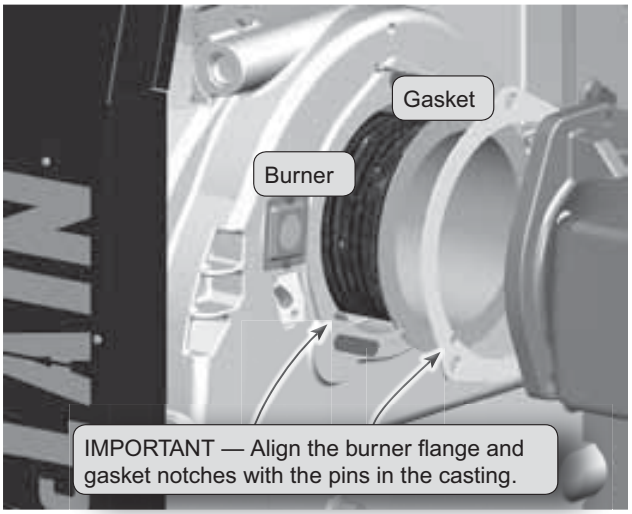

Annual startup *(continued)*

Perform startup procedure per manual

1. Perform all startup procedures on pages page 82 through page 85.

Check burner flame

1. Inspect flame through the observation window using the procedure on page 82.
   a. The high fire flame should be blue and should be stable. The burner surface should be covered with orange dots.
   b. The low fire flame should be stable and evenly distributed over burner surface with a uniform orange color.
2. If the flame is unsatisfactory at either high fire or low fire, perform the testing specified on page 82. If the problem remains, turn off the boiler and allow the boiler to cool down.

To access the burner:

WARNING The boiler contains ceramic fiber materials. Use care when handling these materials per instructions on page 87 of this manual. Failure to comply could result in severe personal injury.

1. Shut off power to unit.
2. Disconnect the two wire harnesses from the blower.
3. Remove the wire harnesses (and ground wire) from the igniter (burner end section) and flame sense assembly (piping end section).

WARNING Use a Phillips-head screwdriver to remove the igniter assembly (burner end section) and flame sense assembly (piping end section, Figure 84, item 6) before removing the burner. Damage to the burner and or igniters can occur during this process.

4. Remove the piping end section combustion chamber access cover (item 11 in Figure 84).
   a. Items are: cover plate (item 1), three nuts (item 2), refractory (item 3), screw-on refractory clip (item 4), gasket (5).

NOTICE Leave the refractory attached to the access plate unless the refractory has to be replaced.

5. Remove plastic reference tube from venturi (Figure 81) — Push in on the tube and the plastic ring on the tube fitting. While keeping the ring pushed in, pull out on the tube.
6. Pull the air flow switch tube off of the hose barb on the venture (Figure 81).
7. Disconnect the air inlet hose from Venturi (Figure 81):
   a. SF1000 & SF1500 — Remove M5 flange bolts (4) from venturi / air inlet hose connection with 8mm socket.
   b. SF2000 — Remove M8 bolts (4) from venturi / air inlet hose connection with 13mm socket.
8. Remove the M5 bolts (4) from the gas valve to gas manifold assembly with 4mm Allen wrench (Figure 81).
9. Remove the M12 Flange nuts(3) from Mixing adapter and front section with 17mm wrench or socket (Figure 82).
10. Carefully slide blower/venturi/mixing adapter off of M12 studs, the assembly can be placed nearby.

WARNING The blower/venturi/mixing adapter assembly is heavy, weighing up to 60 pounds on larger units. Handle carefully to avoid possible personal injury or damage to the components.

11. Remove the burner gasket.

Figure 84 Combustion chamber access cover removal

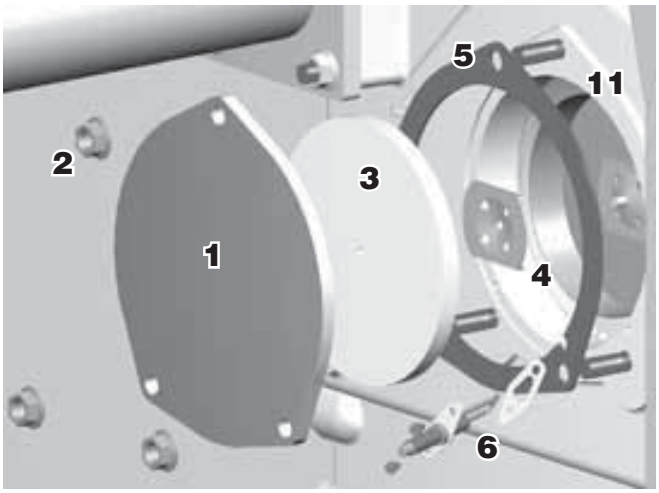

Figure 85 Burner end assembly

12. Remove the burner:
   a. Place your hand and or arm inside the burner for control and stability during removal.

WARNING There may be sharp edges on and inside the burner. Use proper protection on your hand and arm to prevent possible personal injury.

   b. Slowly pull the burner out, being careful not to drag the Fiber mesh on the casting during the process.
13. Clean the burner:
   a. Vacuum cleaner method — Vacuum inside and out, being careful not to rub or scrape the fiber mesh.

WARNING Compressed air method — Take precautions, including close-fitting eye protection, due to possible airborne debris during use of compressed air.

   b. Water flush — **Water Only!** — Before water can used, the refractory disc needs to be removed from the end of the burner (see Figure 100). Carefully twist the screw-on clip (item 7) counter clockwise to remove it from the burner (item 10). This should allow for removal of the metal dish (item 8) and the refractory disc (item 9). Then rinse the burner from inside out. Allow to dry completely. Re-attach the refractory disc and retainer to the burner after cleaning.
14. Re-install the burner:
   a. Carefully insert the burner, avoid dragging fiber mesh as its inserted.
   b. Align small dowel pins at the 5 and 7 o'clock positions with the notches in the burner flange.

Annual startup *(continued)*

c. Insert burner into machined pocket on end section, burner should tilt down slightly as the end of the burner rests on opposite end section.
d. Place Burner gasket over studs and against burner.

15. Carefully slide blower/venturi/mixing adapter onto the M12 studs.

WARNING The blower/venturi/mixing adapter assembly is heavy, weighing up to 60 pounds on larger units. Handle carefully to avoid possible personal injury or damage to the components.

16. Make sure that the burner flange is still resting inside the machined pocket on the end section.
17. Tighten the M12 flange nuts on the Mixing adapter to 22 Ft-lbs (30 N-m).
18. Connect gas manifold back to gas valve with the M5 Allen bolts (4), with torque 53 in-lbs (6 N- m). **Make sure O-ring is still in position on the gas valve.**
19. Reconnect air inlet pipe to venturi, with torque 53 in-lbs (6 N- m).
20. Reconnect plastic reference line to venturi push tube into fitting. The fitting will self-tighten on the tube. Test the connection by lightly pulling on the plastic tube.
21. Press the air flow switch tube back onto the venturi hose barb.

WARNING The air flow switch hose and plastic reference line MUST be replaced correctly on the venturi.

22. Reconnect the two (2) blower wire harnesses.
23. Re-install the piping end section combustion chamber access plate assembly. Tighten the M12 flange nuts on the access plate 22 Ft-lbs (30 N-m).
24. Re-install the igniter assembly and flame sensor assembly. Make sure the gaskets are in good condition.
25. Re-attach the wiring connections to the igniter and flame sensor.
26. Verify there are no gas/air leaks.
27. Reconnect any wiring that was disconnected.
28. Retest the boiler, making sure the flame is acceptable after the cleaning.

Check flame signal

1. Navigate to Diagnostics/Inputs on the Control display (see Figure 67, page 73). The flame signal value must be at least 20 above the Shutdown values given in Figure 86.
2. If the flame signal drops to less than 20 above the Shutdown values, the Control will attempt to correct by increasing the boiler firing rate to increase flame signal.
3. A lower flame signal may indicate a fouled ignitor or damaged ignitor insulation. If cleaning the ignitor does not improve, ground wiring is in good condition, and ground continuity is satisfactory, replace the ignitor.

Figure 86 Flame signal shutdown values

Model SlimFit –	Shutdown flame signal
1000	40
1500	40
2000	40

4. If flame signal still remains low, inspect the vent and air piping. Then inspect the heat exchanger, following the procedures given in this manual for removal and reinstallation of the heat exchanger cover plate and other boiler components. Clean the heat exchanger as described in this manual if necessary.

Check flue gas temperature

1. Set the boiler to high fire. Then adjust the control module display to view flue gas temperature and boiler return temperature.
2. The flue gas temperature should be no more than 30°F higher than the boiler return temperature.
3. If the flue temperature is higher than this, shut down the boiler, allow to cool, and follow the procedure starting on page 102 to clean the heat exchanger.

Check blower speeds

1. For installations at altitudes above 5,500 feet, make sure the control is set up for high altitude in the boiler setup menu. The Control module automatically adjusts low fire and ignition rates to compensate for high altitude conditions.
2. For installations below 5,500 feet, DO NOT enable high altitude.
3. Use the Control display to navigate to Manual test mode (see Figure 68, page 74).
4. Set the firing rate to Low (low fire).
5. Write down the blower RPM value shown and compare to the value in the table in Figure 74, page 82. Low fire rate (and corresponding blower speed) is adjusted in the boiler setup menu.
6. Set the firing rate to MEDIUM (ignition rate).
7. Write down the blower RPM value. It should be within 200 RPM of the value listed in the table in Figure 74, page 82.
8. Set the firing rate to High (high fire).
9. Write down the blower RPM value. It should be within 200 RPM of the value given in the table in Figure 74, page 82.
10. If any of the values are outside the ranges listed in the previous steps, contact the factory for technical assistance.

Manual Test Mode for Single and Multiple Boilers

Single Boiler

1. Navigate to Manual Test Mode screen under DIAGNOSTICS menu.
2. Generate a call for heat and wait until the burner is lit, if not yet in operation.
3. Press ENTER and select the desired FORCE RATE. Rate will be forced to setting for 10 minutes.

Review with owner

1. Review the SlimFit User's Information Manual with the owner.
2. Emphasize the following to the owner:
   a. Perform the maintenance schedule specified in the User's Information Manual.
   b. Call a licensed contractor should the boiler or system exhibit any unusual behavior.
   c. Follow the proper shutdown procedure.
   d. Schedule an annual startup at the beginning of the next heating season.

Troubleshooting

VERIFY PROPER OPERATION AFTER SERVICING.

CAUTION Before servicing and making connections . . . **ALWAYS TURN POWER OFF TO THE BOILER TO PREVENT ELECTRICAL SURGES, WHICH CAN DAMAGE BOILER COMPONENTS.**

NOTICE Before calling, always complete the "SlimFit Gas Data Collection Sheet" (page 118).
Record the boiler size and CP number (located on boiler top jacket panel, next to the air inlet connection).

WARNING **ELECTRICAL SHOCK HAZARD** — The boiler ON/OFF switch does not turn off all power to the boiler. **TURN OFF ALL POWER TO THE BOILER WHEN SERVICING**. Internal wiring is still powered when the switch is off.

CAUTION Label all wires prior to disconnection when servicing controls. Wiring errors can cause improper and dangerous operation. Always disconnect power to boiler before servicing. Failure to comply could result in severe personal injury, death or substantial property damage.

WARNING Never jumper (bypass) any device except for momentary testing. Severe personal injury, death or substantial property damage can result.

Before troubleshooting:

1. See Figure 87 for tools and kits recommended for troubleshooting SlimFit boilers.
2. Check for 120 VAC (minimum 102 VAC to maximum 132 VAC) to boiler.
3. Check the Control's last three lockout histories.
   a. See Figure 68, page 74 for access information.
   b. Scroll down to DIAGNOSTICS and press the enter key.
   c. Scroll down to PAST ERRORS and press the enter key.
   d. Record the first four data records and then highlight the history record you want to view.
   e. Follow information at the bottom of the screen to navigate through your lockout histories.

Figure 87 Tools and kits for troubleshooting

Tools needed	Purpose
#2 Phillips Screwdriver	Remove 4 screws to remove the top front cover.
1/16" flat blade screwdriver	Used for wiring on terminal blocks.
3/16" Allen Wrench (Hex Key)	To remove gas valve pressure tap plugs.
13 mm Nut driver/ ratchet	To remove the heat exchanger cleanout plate, mixing tube or blower.
3 mm Allen wrench (Hex Key)	To adjust gas valve throttle.
4 mm Allen wrench (Hex Key)	To add orifice to change from natural to propane.

Tools needed	Purpose
13 mm wrench	To access combustion system and heat exchanger assembly, blower or mixing tube.
Multimeter	To take measurement readings on sensors and electrical components.
Manometer (Inclined or digital)	To measure the gas pressure coming to the boiler.
Combustion analyzer (Digital preferred)	For combustion testing.
Contact thermometer	For checking surface temperatures of heat exchanger and pipes.
T40 Torx driver	For gas valve offset adjustment.
8 mm wrench	For gas piping to venturi.

Troubleshooting *(continued)*

Check the following:

1. Space heating:
   a. Make sure thermostat is calling for heat and contacts (including appropriate zone controls) are closed.
   b. Check for 24VAC between thermostat wire nuts and ground.
2. DHW:
   a. Make sure tank aquastat is calling for heat.
3. BMS systems:
   a. Make sure the BMS is calling for heat.
4. Make sure all external limit controls are either installed (and closed) or temporarily jumpered for testing.
5. Make sure that connectors to the control module are securely plugged in at module and originating controls and harness connectors.
6. Gas pressure must be as specified on page 45. Make sure gas pressure switches are not tripped.

Always check Control module fuses

WARNING ALWAYS check control module fuses before replacing control module or any major components (blower, etc.). If one of these fuses is blown, it can prevent control module or other components from operating.

1. Turn OFF power to boiler at external line switch.
2. Remove jacket top panel to expose the Control module and Expansion module.
3. Remove and inspect the two (2) Control fuses and the Expansion module fuse (located as shown below).

Figure 88 Control module fuse

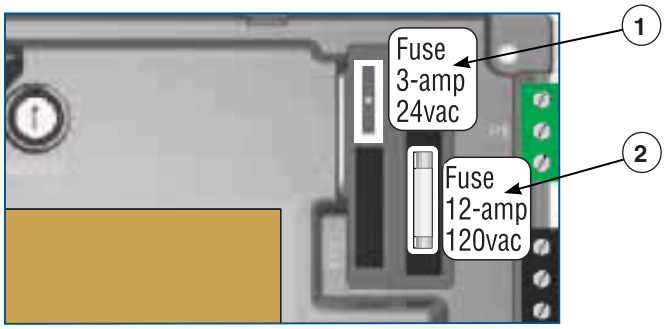

Figure 89 Control module fuse

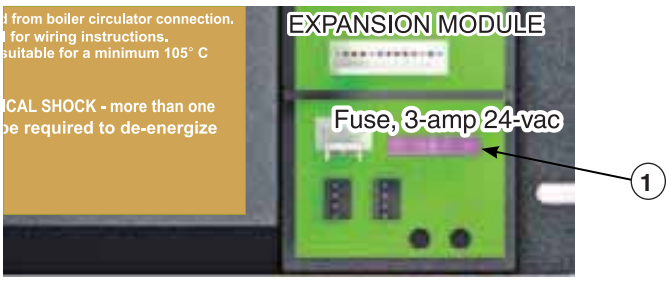

4. If necessary, replace the fuse:
   a. Item 1 - Low voltage circuit fuse is a 3-amp fast-blow (Littelfuse 0287003).
   b. Item 2 - Line voltage circuit fuse is a 12-amp fast-blow (Littelfuse 0314012 MXP or Bussman ABC-12-R).

WARNING Do not jumper fuse or replace with any fuse except as specified. Failure to comply could result in severe personal injury, death or substantial property damage.

5. Reinstall jacket top panel and boiler jacket door after checking the fuses.
6. Restore power to boiler at external line switch and verify boiler operation after completing boiler service.

Checking temperature sensors

1. The boiler temperature sensors (flue, outdoor, boiler out, boiler in, heat exchanger and system) are all resistance-type devices.
2. Figure 90, page 94 shows the correct value for the sensor at various temperatures.
3. Use the resistance values at 32°F, 60°F, 70°F and 212°F to measure the sensor resistance at known temperatures (freezing point, room temperature and sea level boiling point). For freezing point and boiling point, insert the sensor in water at that temperature. Use an ohmmeter to read resistance value.
4. To check whether the control module is correctly sensing temperature, you can use a resistance decade box. Connect the decade box temporarily in place of a sensor and read the corresponding temperature on the Control display. The temperature should be close to the value corresponding to the input resistance.

Figure 90 Sensor resistance value

Sensor resistances for Flue temperature sensor, Return sensor, Outdoor sensor, Header sensor					
Temp (°F)	Sensor ohms		Temp (°F)	Sensor ohms	
	Min	Max		Min	Max
32	34265	37871	**120**	4517	4992
40	27834	30764	**130**	3698	4088
50	21630	23907	**140**	3043	3364
60	16944	18727	**150**	2517	2782
70	13372	14780	**160**	2091	2311
80	10629	11747	**170**	1744	1928
90	8504	9399	**180**	1461	1615
100	6847	7568	**190**	1229	1359
110	5545	6129	**200**	1038	1147

Sensor resistances for Boiler outlet sensor			
Temp (°F)	Sensor ohms	Temp (°F)	Sensor ohms
32	32624	**131**	2982
41	25381	**140**	2483
50	19897	**149**	2079
59	15711	**158**	1748
68	12493	**167**	1476
77	10000	**176**	1252
86	8056	**185**	1066
95	6530	**194**	912
104	5324	**203**	782
113	4365	**212**	674
122	3599		

Troubleshooting *(continued)*

WARNING Make sure to determine the causes of outages. Do not leave the boiler operating without a complete diagnosis.

Control fault indications

1. The Control provides diagnostic information for both automatic reset conditions and manual reset conditions. See Figure 58, page 66 for information available on the Control display.
2. Figure 91 shows the screen behavior during an automatic or manual reset condition. The table below the display illustration lists manual reset conditions and how to reset from them.
3. Figure 92, page 96 lists conditions that will cause the control to display a constant red screen. The boiler will automatically restart if the condition self-corrects or the technician uses the Control's manual reset screens to reset.

Figure 91 Control display toggles when in lockout, with screen flashing red to gray

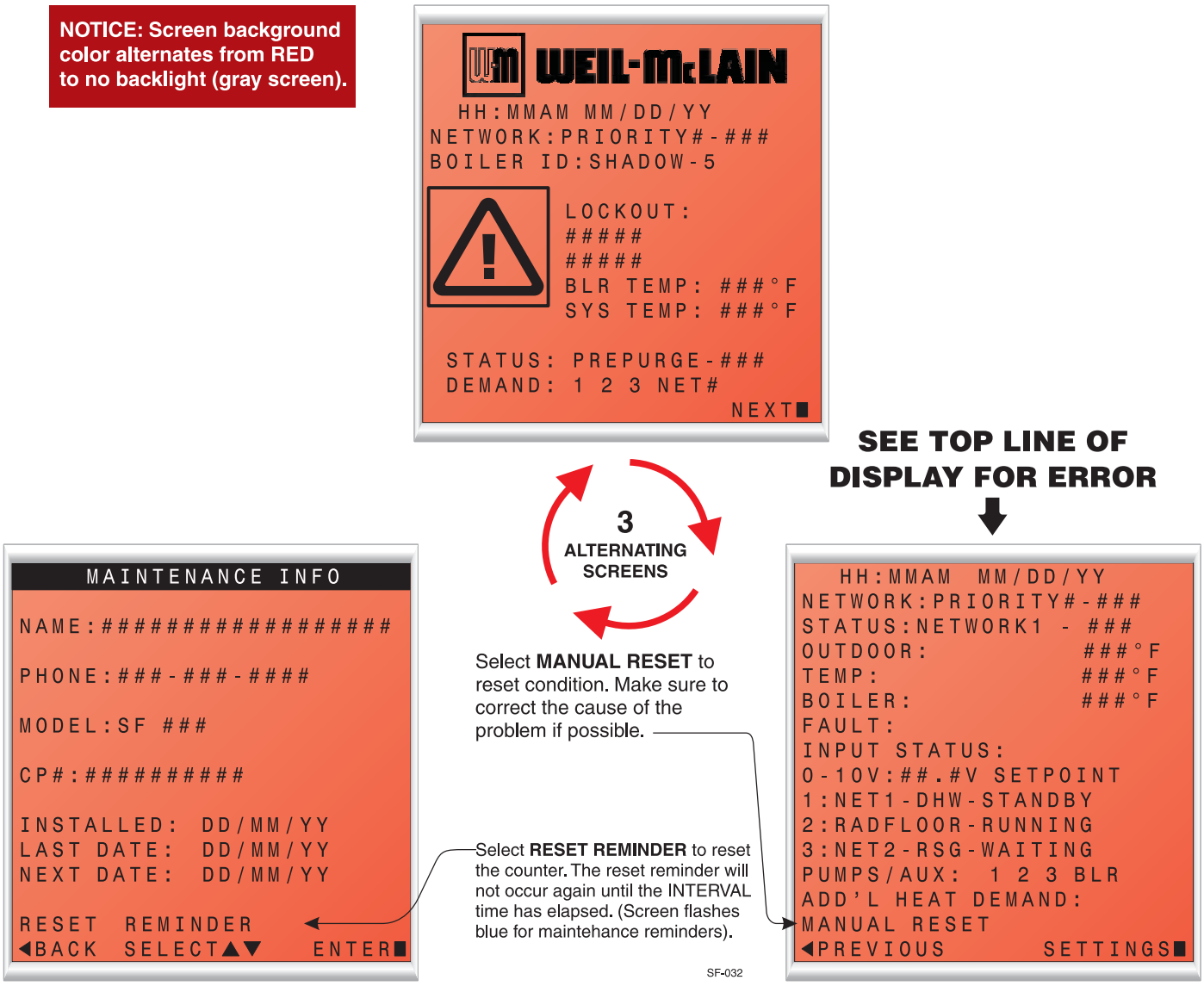

Troubleshooting *(continued)*

Figure 92 Troubleshooting suggestions for SlimFit boilers

RESET TO FACTORY DEFAULT

1. Selecting this will prompt the user to hold the enter button for a specified length of time. Upon completion, this will reset the control settings back to factory installed settings.

   ONCE THIS IS CHOSEN, PREVIOUS SETTINGS CANNOT BE RECOVERED. ENSURE THIS ACTION IS TRULY DESIRED BEFORE CONTINUING.

2. Reset to Factory Default can be found on the BOILER SETTINGS menu, see Figure 62, page 69.

Control Error Condition Log

The Control is able to record information about the boiler's condition at the time of the three previous faults or errors. This information is available to view in Contractor Menus under "DIAGNOSTICS" by selecting "PAST ERRORS." The control will display the following information:

Information	Description	Action
Control Fault	Records number	Select and press the enter key to reset this count
Ignition Retries	Displays the number of ignition attempts in the current ignition sequence.	
Manual Reset Count	Records number of lockouts that required a manual reset since this count was last cleared.	Select and press the enter key to reset this count
Auto Reset Count	Records number of lockouts that have automatically reset since this count was last cleared.	Select and press the enter key to reset this count
Lockout History 1	Details of present or last recorded lockout	Select and press the enter key for more details
Lockout History 2	Details of boiler during the second oldest lockout still in memory	Select and press the enter key for more details
Lockout History 3	Details of boiler during the oldest lockout still in memory	Select and press the enter key for more details

How to read the last 3 lockout histories:

1. Scroll down to "DIAGNOSTICS" and press the enter key (Square Key in center)
2. Scroll down to "ERRORS" and press the enter key (Square Key in center)
3. Scroll down to "LOCKOUT HISTORY #" and press the enter key.
4. Scroll to choose the either "MANUAL RESET" or "AUTO RESET" and press the enter key to display the fault condition that was recorded.
5. Press the left arrow key to return to the LOCKOUT HISTORY # screen. Scroll up or down to highlight other choices and press the enter key to view the details of the boiler's condition when the lockout was recorded.
6. TO CLEAR ALL LOCKOUT HISTORIES: While on the "ERRORS" screen, hold the Left and Right arrow buttons simultaneously for 5 seconds.

How to clear all lockout histories:

1. While on the "PAST ERRORS" screen, hold the Left and Right arrow buttons simultaneously for 7 seconds.

Troubleshooting *(continued)*

Figure 92 Troubleshooting suggestions for SlimFit boilers *(continued)*

Control Fault Displays, Diagnostics and Suggested Corrective Actions			
Display	**Condition**	**Diagnostics**	**Corrective Action(s)**
Nothing shown on display screen and boiler will not respond to call for heat	Control is not receiving 24V power.	Check wiring for short circuit or incorrect wiring.	Correct wiring per wiring diagram including connection of transformer to the control.
		Check 3-amp low voltage fuse on control shown on page 94.	Replace fuse with proper part found in replacement part section of this manual. If fuse blows again recheck wiring per diagram.
		Check transformer connection to the control per wiring diagram. Check for 24V output of transformer.	Replace transformer if it is receiving 120VAC, but not outputting 24VAC.
Nothing shown on display screen and boiler will not respond to call for heat	Control is not receiving 24V power.	Check wiring for short circuit or incorrect wiring.	Correct wiring per wiring diagram including connection of transformer to the control.
		Check 3-amp low voltage fuse on control shown on page 94.	Replace fuse with proper part found in replacement part section of this manual. If fuse blows again recheck wiring per diagram.
		Check transformer connection to the control per wiring diagram. Check for 24V output of transformer.	Replace transformer if it is receiving 120VAC, but not outputting 24VAC.
Nothing is shown in display screen and no other boiler components are operating	Control is not receiving 120V power.	Check service switch and/or circuit breaker to boiler is turned on.	Turn on service switch to power boiler.
		Is there 120 VAC at the service switch?	Troubleshoot and correct the power supply to the service switch.
		Check for 120 VAC at the line voltage terminal block located inside the top left electrical compartment.	Correct wiring inside the control pod using the wiring diagram in this manual.
		Inspect 12-amp fuse as shown on page 94. Replace if necessary.	Replace the fuse with proper part found in the replacement part section of this manual. If fuse blows again recheck wiring per diagram.
Nothing is shown on display screen, but boiler is operating	Occurs if the communication is lost from the control to the display.	Check for loose connections and proper pin alignment/ engagement on the control's plug P9, Pump/Com board P6 + J1, and the back of the display circuit board.	Check for continuity on the wire harness from the display to the control. See repair parts section for proper replacement part.
		Cycle power off and on using boiler power switch and check for operation.	Replace with new display module. See repair parts section for proper replacement part.
	or Display contrast needs to be adjusted.	Look at the screen from other angles.	Power cycle the boiler, wait about 45 seconds then Press and hold the Enter button. While holding the Enter button, tap the up or down buttons to adjust the contrast level. If this does not work replace display.
TEMP RISE TOO QUICKLY	Occurs if supply water temperature in heat exchanger rises faster than 2º F per second during the first two minutes the burner is on.	Automatically resets after 1 minute delay or using manual reset on display. Manual reset is necessary after 5 automatic resets have occurred during the same Priority heat demand. Reset using manual reset screen on display.	Verify water pipe is installed correctly per instructions in this manual.
			Verify proper circulator and speed for boiler size and system requirements.
			See message displayed TEMPERATURE SENSOR and follow procedure for loose connections.
DISPLAY COMM Fault	Occurs if display communications out for 30 seconds.	Automatically resets when communication is re-established.	Check for a loose connection at the molex plug on the control and connection on the back of the display.

Troubleshooting *(continued)*

Figure 92 Troubleshooting suggestions for SlimFit boilers *(continued)*

Control Fault Displays, Diagnostics and Suggested Corrective Actions			
Display	**Condition**	**Diagnostics**	**Corrective Action(s)**
LOW WTR CUTOFF OPEN	Occurs if internal low water cutoff contacts open.	Automatic reset occurs if contacts are open at least one second, but less than 5 seconds. Manual reset of control if contacts are open longer than 5 seconds.	Check for low water condition in system. Repair system as necessary refer to piping section of this manual. If low water condition does not exist, check Diagnostics — Inputs screen to view status of Low Water Cutoff. If shown as OPEN check wiring between LWCO and control. If wiring is alright, remove LWCO and Clean probe. If problem still exist, then replace the LWCO. Low water cutoff indicator light codes: GREEN on = Normal operation GREEN + AMBER on = Service probe soon RED + AMBER = Control locked out RED blinking = LWCO component failure **⚠WARNING** When the service indicator light code occurs, schedule a service appointment as soon as possible to avoid the boiler shutting down on low water lockout. To service the probe, shut off all power supplies to the boiler. Close the boiler isolation valves. Then drain enough water from the boiler to allow removing the low water cutoff. Inspect the probe. Clean if necessary to remove scale accumulation. Reinstall the low water cutoff and restore boiler to operation. If the problem persists, replace the low water cutoff probe.
SUPPLY 58° F > RETURN	Boiler Out temperature has exceeded the Boiler In temperature by more than 58° F.	Automatically resets after 30 second delay when conditions no longer exist or using manual reset on display.	Verify water pipe is installed correctly per instructions in this manual.
			Verify proper circulator and speed for boiler size and system requirements.
			See message displayed TEMPERATURE SENSOR and follow procedure for loose connections.
RETURN > SUPPLY	Occurs if a return water temperature is greater than the corresponding supply temperature by 10° F or more.	Automatically resets when condition no longer exists.	Verify proper flow direction of the boiler circulator. Verify proper placement of system sensors for single or multiple boiler system. System sensors should be on system piping not on the boiler loop. Verify sensors are wired to correct terminal locations. System sensors may need to be located further away from the boiler loop connection to the system, if proximity to the boiler loop is causing sensors to be heated inaccurately.
SUPPLY WATER TEMPERATURE TOO HIGH	Occurs when the System Supply temperature goes above 200° F when the burner is running.	Automatically resets when Supply temperature goes below 200° F.	Verify proper flow direction of the boiler circulator. This circulator must be installed to push water through the system.
TEMPERATURE SENSOR FAULT	Occurs if a temperature sensor has electrically shorted (SHORT) or has become disconnected (OPEN).	Will automatically reset if the condition clears.	Check all the temperature readings of the boiler on the DIAGNOSTICS - TEMPERATURES menu to determine if any sensors are currently displayed as SHORT or OPEN. Compare this to the boiler temperatures recorded in the DIAGNOSTICS - ERRORS - LOCKOUT HISTORY # - TEMPERATURES during the last several lockout conditions. Determine which sensors are suspect and measure their resistance value and compare it to the values shown in Figure 86, page 92. If the resistance values are incorrect replace the temperature sensor. Refer to repair parts section for proper part number.
			Check wire harness for loose connections and pin engagement at sensor connection, chassis mount connection through control housing, and the control. Unplug connection at sensor and at control and check continuity between ends.
			If problem persists after checking items above, replace control. Refer to repair parts section for kit number.

Troubleshooting *(continued)*

Figure 92 Troubleshooting suggestions for SlimFit boilers *(continued)*

Display	Condition	Diagnostics	Corrective Action(s)
LIMIT OPEN	Occurs if manual or automatic reset limit opens.	Automatic external limit will reset 2½ minutes after external limit device closes. Manual limit fault must be reset by choosing Manual Reset on the display.	Is there an external safety device connected? If yes, trouble shoot the external limit to determine and correct the cause that opened the limit. Also check for loose wiring connections.
			Remove the top right Control tray cover and inspect the connector. Ensure a jumper is installed across the MAN LIMIT terminals if not using a manual reset external limit. Ensure a jumper is installed across the AUTO LIMIT terminals if not using a automatic reset external limit.
HIGH TEMP LIMIT	Boiler temperature sensor reached High Temp Limit setting (no higher than 200° F).	Reset using manual reset screen on display.	Verify that high limit setting is at least 10° F above the maximum target temperature plus the off differential.
			Verify all isolation valves are open and circulators are programmed into the control properly. The boiler circulator output and System Pump/Aux. output can be configured to turn on or off with each priority. Refer to the Control Setup section to configure these properly for the system.
			Verify water pipe is installed correctly per instructions in this manual.
			Verify proper circulator sizing for boiler size and system requirements.
			See message displayed TEMPERATURE SENSOR and follow procedure for loose connections.
FLAME FAULT	Occurs if flame is detected when there should be no flame.	Reset using manual reset screen on display.	Burner may be operating too hot due to incorrect combustion. Inspect flame and conduct combustion test. Force boiler into high fire. Check flue gases with combustion analyzer and correct using the maintenance and startup procedure in this manual.
			Verify FLAME SIGNAL value quickly goes to zero on the DIAGNOSTICS - INPUTS screen when the gas valve closes.
			Check for flame at burner via flame current with burner off. Turn boiler off and watch flame through observation port. If flame continues after shut down replace gas valve.
BLOWER FAULT	Blower unable to reach required speed or does not reach 0 RPM when turned off.	Reset using manual reset screen on display; Control will check again after 1 hour and will automatically restart if condition is corrected.	Check wire harness for loose connections and pin engagement at blower connections, chassis mount connection through control housing, and control. Unplug connection at blower and at control and check continuity between ends. Blower is connected to both low voltage and line voltage harness.
			Check Diagnostics - Inputs screen with boiler in standby mode and blower not running. If BLOWER SPEED is not 0 RPM then replace blower.
			If blower does not rotate during ignition sequence check for 120V power at blower connection. If 120 VAC power at blower motor and it doesn't start replace blower. Check power at control. If 120VAC is not present at control when boiler is powered replace Control. Refer to repair parts section.

Troubleshooting *(continued)*

Figure 92 Troubleshooting suggestions for SlimFit boilers *(continued)*

Display	Condition	Diagnostics	Corrective Action(s)
IGNITION FAULT	Boiler went through 5 ignition attempts and never detected flame or flame sense value never reached minimum threshold for boiler model.	Automatically resets after 1 hour or can be reset by performing manual reset on boiler.	Check condensate trap for blockage allowing condensate to accumulate inside heat exchanger. Check ignition cable connection.
			Fouled, worn, bent, or faulty igniter. Fouled igniters can be cleaned for additional use with steel wool. Worn or badly fouled igniters should be replaced with the proper repair part. Igniter rods should be parallel with a 3.5 mm (0.138 in) spark gap. NOTICE: Thin white deposits on the igniter are typical, but brown or black deposits could be the result of flue gas recirculation. Thoroughly inspect the venting system and termination for the possibility of leakage or flue gas feedback into the air line.
			Dirty burner and/or heat exchanger will cause high back pressure and poor ignition. Follow procedure in maintenance section of this manual to clean burner and heat exchanger. Visual inspection of flueways may not be sufficient to diagnose condition.
			Check combustion settings on high and low fire and adjust per setup instructions if necessary.
			Check incoming gas pressure with boiler off and at high fire. Adjust within limits on rating label.
			Verify correct boiler model and altitude is selected in control and correct elevation must be entered when operating above 2,00 feet.
			Check ignition cable resistance. Should measure 1000 Ohms (+/- 50 Ohms).
			Check for flue pipe and intake pipe restrictions or blockage.
			Check burner fasteners and gaskets.
			Check venturi gaskets and proper venturi. (Propane models use different venturi's).
AIR PRESSURE Switch Open	Occurs when Air Pressure connection is open.	Reset using Manual Reset screen on display. High pressure in the exhaust pipe or high vacuum in the boiler intake or cabinet has caused the air switch to open. The switch is closed in normal operating conditions.	Check boiler size selected in control against boiler rating label. Correct if necessary to select the proper boiler size.
			Check exhaust and intake pipe for restrictions or blockage.
			Check condensate drain for blockage. If condensate is unable to drain out of the boiler it can begin to block the flow of exhaust gases. Clean the condensate collection area of the base and condensate trap. Refill trap with fresh water.
			Check the P7 connection as seen on Figures 52, page 48 & Figure 53, page 50. Check the connections on the pressure switch.
GAS PRESSURE SW FAULT	Gas pressure switch is open (high or low).	Either the low gas pressure switch or high gas pressure switch has opened due to incorrect gas pressure being supplied to the boiler. Remove front door of boiler and look at pressure switches. The upper switch is the high gas pressure switch and the lower one is a low gas pressure switch. Whichever switch has locked-out will have an indicator light on. Switches can be reset by pushing on plastic cover in the middle of the dial as indicated on the switch. Control will also need reset using display after gas pressure switch has been reset.	Check gas pressure at tee mounted behind gas pressure switches during high and low fire and boiler off. Pressure should always be with limits on rating label. Undersized gas supply pipes or regulators may cause low gas pressure issues while the boiler is operating and possibly high gas pressure when the boiler shuts down.
			Insure the pressure regulator in the gas supply line is a lockup-type.
			Ensure gas pressure switch settings are correct. Low Pressure Switch Setting = 2 inches H2O High Pressure Switch Setting = 14 inches H2O

Troubleshooting *(continued)*

Figure 92 Troubleshooting suggestions for SlimFit boilers *(continued)*

Display	Condition	Diagnostics	Corrective Action(s)
MINIMUM AIR FLOW SWITCH FAULT	Min air flow switch is open when it should be closed, or closed when it should be open.	Switch should close when the blower passes enough air. Manual reset is required.	Check blower is operating correctly.
			Check to see if switch is not stuck open/closed.
			Check hose connection to switch for disconnect or damaged.
			Check wiring connections are firmly connected and not damaged.
HW FAULT EXPANSION BRD	Expansion Control Board hardware has failed.	Expansion Control Board has detected an issue with it's hardware and has locked out. Requires a manual reset.	Check boiler size selected in Control against boiler rating label. Correct if necessary to select the proper boiler size.
GV FAULT EXPANSION BRD	Gas valve output of the Expansion module.	Expansion Control Board has detected an issue with the gas valve circuit. Requires a manual reset.	Check the wire harnesses between the Control, Expansion module, and gas valve.
EXP BOARD COM FAULT	Expansion Control Board communication fault.	Communication has been lost between the Control and the Expansion Control Board.	Check the communication wire harness between the two controls.
Hardware Fault	Occurs when micro-controllers on main board have a RAM or ROM error, or communication is cut off.	Check for hardware damages.	RAM or ROM errors can be reset with the manual reset option. If problems persist, replace main board.
Hardware Fault 1,2,3,4	The control has detected a problem with its gas valve output circuit.	Auto reset if condition is clear after lockout, then 1 hour automatic reset if condition clear, then manual reset required.	Check for physical damages. Check connections to gas valve and gas pressure. If problem persists, replace main board.
Closure Switch Fault	Closure switch connections on P7 Pins 2 and 3 are open for more than 4 minutes	Soft lockout when 4 minute timer expires. Reset when closure is made.	None – Check jumper on correct pins and secure connection. Flow switch attached – Check correct pump is on, check wiring to flow switch, and check switch is closing. CAD – Check voltage to damper. Check damper is opening.
OUTDOOR SENSOR ERROR	Outdoor temperature sensor short or OPEN.	Will automatically reset if the condition clears. Warning only. Supply Max is targeted until ODT is restored, if used for target adjustment.	Determine which sensors are suspect and measure their resistance value and compare it to the values shown in Figure 90, page 94. If the resistance values are incorrect replace the temperature sensor. Refer to repair parts section for proper part number. Check wire harness for loose connections and pin engagement at sensor connection, chassis mount connection through control housing, and the control. Unplug connection at sensor and at control and check continuity between ends. If problem persists after checking items above, replace control. Refer to repair parts section for kit number.
Flue Temp Too High	Occurs if flue temperature sensor exceeds 210°F (Warning) or 220°F (Lockout).	Automatic reset occurs if temperature drops below 210°F for 2 ½ minutes. Manual reset is required if the temperature rises above 220°F. Reset using manual reset screen on display.	Follow procedure above for SHORT and OPEN sensor conditions to properly diagnose sensor. In addition inspect heat exchanger combustion chamber and flue-ways for abnormal wear and buildup. Inspect vent system for abnormal wear or damage. Contact Weil-McLain Technical Support.

Maintenance

Disconnect power before servicing

WARNING Electrical shock hazard — Disconnect all electrical power to the boiler before attempting maintenance procedures. Failure to complete could result in severe personal injury, death or substantial property damage.

Perform startup and check/out

WARNING Removing and reinstalling components can change boiler behavior.

CAUTION After any maintenance procedure, you must verify operation after servicing. To do so, follow the complete procedure for boiler and system startup, beginning on page 79. Failure to comply could result in severe personal injury, death or substantial property damage.

CAUTION Label all wires prior to disconnection when serving controls. Wiring errors can cause improper and dangerous operation.

General maintenance

1. Oil motors in system requiring regular oiling.
2. See Oiled bearing pumps for motor oiling procedures.

Oiled-bearing pumps

1. Check pumps in the system. Oil any pumps requiring oil, following pump manufacturer's instructions. Over-oiling will damage the pump.

Clean the heat exchanger when required — water side

1. In order for the efficiency of boilers to increase beyond the condensing limit, new materials have been introduced for the heat exchanger, including aluminum.
2. Aluminum has excellent heat transfer characteristics and is light in weight.
3. These new materials also require cleaning solutions that differ from those used in conventional cast iron and steel boilers.

WARNING One common cleaning method that **CANNOT** be used with systems containing aluminum is a solution of trisodium phosphate, commonly referred to as "TSP."

The reason that trisodium phosphate cannot be used is that the cleaning solution has a very high pH level — while removing the scale in the system, it also removes the natural protective oxide layer from the aluminum. The oxide layer will reform, but if small amounts of the trisodium phosphate remain in the system, the chemical will continue to remove the protective oxide layer, leading to reduced heat exchanger life.

4. Weil-McLain recommends Sentinel X400 for cleaning boiler. See the Repair Parts section at the end of this manual for ordering information.

Clean the heat exchanger when required — flue side

1. Shut down boiler:
   a. Follow "To Turn Off Gas to Appliance" instructions on boiler and Lighting instructions.
   b. Do not drain boiler unless it will be exposed to freezing temperatures. If using freeze prevention fluid in system, do not drain.
2. Allow time for boiler to cool to room temperature if it has been firing.

Remove heat exchanger cleanout plate and burner

1. Close the external manual gas valve.
2. Disconnect all power to the boiler.
3. Allow the boiler to cool if it has been operating.
4. Use a 13mm wrench or socket to remove the nuts that secure the heat exchanger cleanout plate to the heat exchanger (Figure 93, page 103).
5. Remove the cleanout plate. Handle the cleanout plate gasket carefully to avoid damage.
6. Follow the procedure on page 91 to remove the burner, piping end combustion chamber access plate and the blower/venturi/mixing tube assembly.

Use heat exchanger cleaning tool

1. Use the heat exchanger cleaning tool (supplied with the boiler) or a piece of 20-gauge or lighter sheet metal ¾" wide by about 18 inches long to loosen deposits.
2. Slide the cleaning tool through the heat exchanger pins in the three directions shown in Figure 94, page 103.
3. Vacuum most of the debris out of the base through the flue inspection opening.

Water spray the heat exchanger

1. Disconnect the condensate line at the bottom of the heat exchanger so debris will not clog the trap.
   a. Loosen the hose clamps at both ends of the condensate line.
   b. Remove the line and place a pan under the trap connection.
2. Use the combustion chamber openings at either end to spray water down onto the heat exchanger pins. Continue spraying until all debris on the pins has been flushed into the base.
   a. Spray water into the flue inspection opening to flush remaining sediment to the condensate outlet.
   b. Spray water through the condensate line to clean it thoroughly.
   c. Remove the pan and re-install the condensate line.
   d. Re-install the flue inspection plug.

Inspect cleanout plate gasket

1. Inspect the cleanout plate gasket (Figure 93, page 103). Replace if damaged.

Maintenance *(continued)*

Figure 93 Cleanout plate removal/re-installation

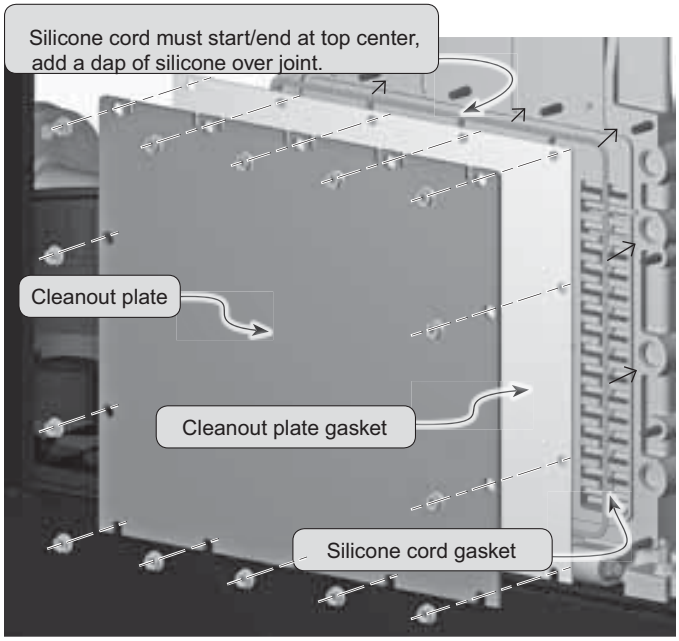

Figure 94 Using the cleaning tool

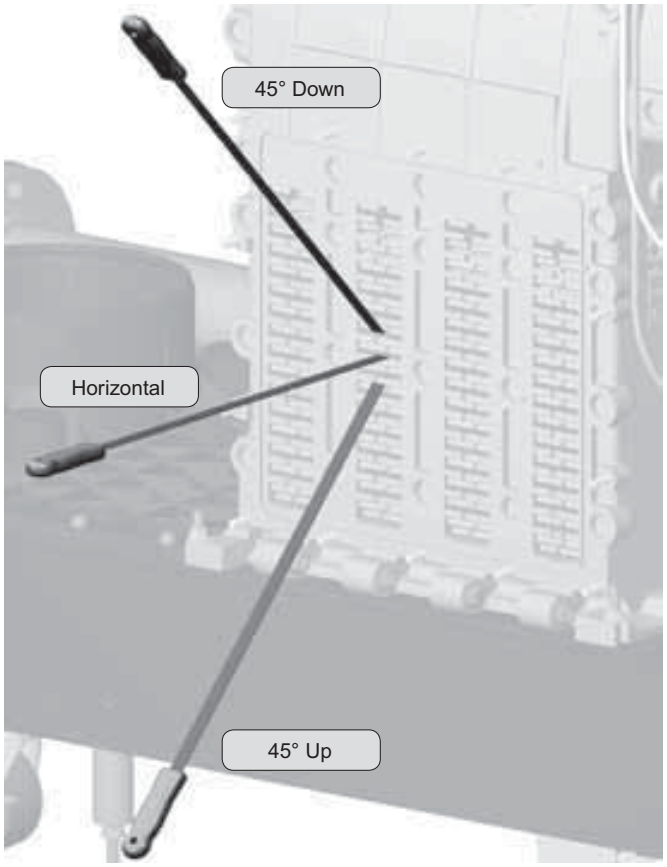

Re-install cleanout plate

1. Install a new silicone cord gasket into the groove. See instructions at right.
2. Re-install the cleanout plate gasket that was removed and inspected earlier.
3. Position the cleanout plate.
4. **See Figure 95, page 104**. Re-install the hex head nuts on the cleanout plate mounting studs and tighten in the staggered pattern shown for the boiler model until the cleanout plate is uniformly tightened.

WARNING Gradually tighten the cleanout plate nuts in the sequence shown in Figure 95, page 104 until torque reaches 18 N-m/160 in-lbs/13 ft-lbs.

If the tightening is not done using this top-to-bottom, center out method, the plate could buckle, allowing a flue gas leakage.

Re-install venturi/blower/mixing tube assembly

1. Follow the procedure on page 91 to re-install the burner, piping end combustion chamber access plate and the blower/venturi/mixing tube assembly.
2. Reconnect wiring, including the ignitor ground wire connection to the top ignitor mounting screw.

Restart and test the boiler

1. Restore gas supply and power to the boiler.
2. Start the boiler and verify operation following the procedures given in this manual.

WARNING **Cleanout plate gaskets —** If the cleanout plate gasket has been damaged, or the silicone cord gasket has been damaged or stretched, replace it before placing the boiler back in operation.

Replace cleanout plate gasket:

Replace the red silicone cord with new from Annual Maintenance kit or cover plate replacement kit.

Make sure any old silicone has been properly removed.

Loosely hold gasket in hands, leave enough slack that when inserting into both upper corners of the machined groove so there is a slight sag in the middle.

Carefully press the top portion of the gasket into the groove

Loosely grab the bottom portion of the gasket, and insert into the bottom corners of the machined groove, again trying to leave a little slack in all of the straight portions of the groove.

Carefully press the gasket into the sides and bottom portions of the machined groove.

Failure to comply could result in severe personal injury, death or substantial property damage.

Maintenance *(continued)*

Figure 95 Cleanout plate nut tightening sequences

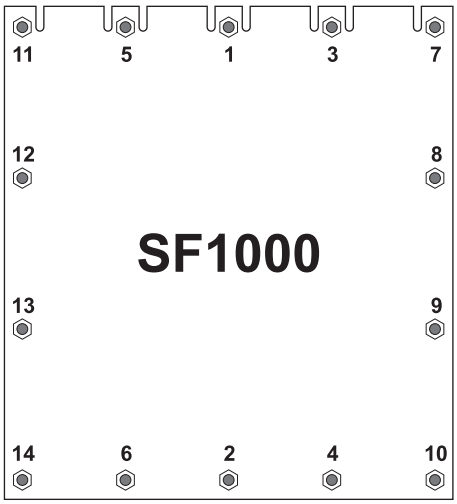

WARNING **Gradually tighten** the cleanout plate nuts in the sequence shown in Figure 95 until torque reaches 18 N-m/160 in-lbs/13 ft-lbs.

If the tightening is not done using this top-to-bottom, center out method, the plate could buckle, allowing a flue gas leakage.

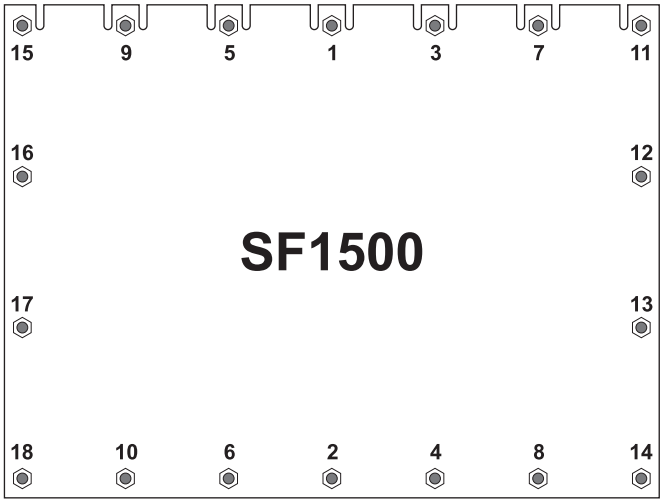

SF7001

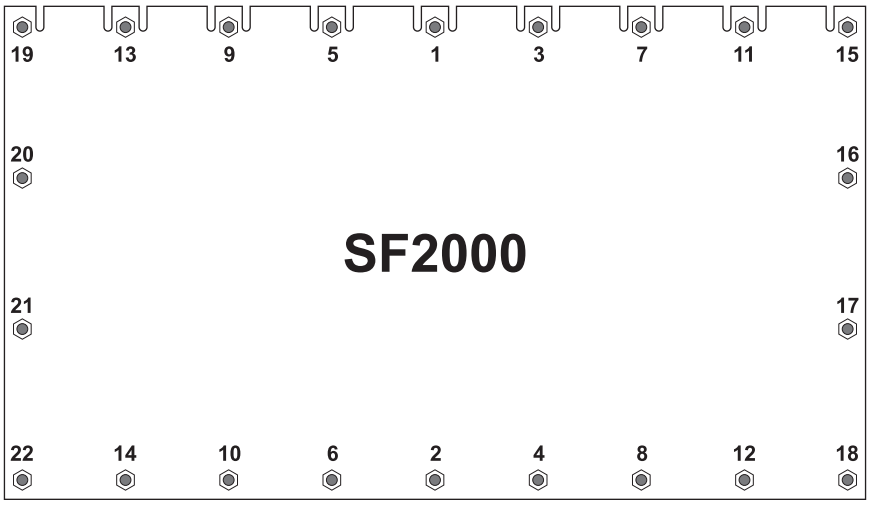

Replacement parts

Go to www.weil-mclain.com to locate Weil-McLain distributors

WARNING Replacement parts must be purchased through a local Weil-McLain distributor. When ordering, specify boiler model and size and include description and part number of replacement part. Results from using modified or other manufactured parts will not be covered by warranty and may damage boiler or impair operation.

NOTICE Weil-McLain part numbers are found in Weil-McLain Boilers and Controls Repair Parts Lists.

WARNING **The boiler contains ceramic fiber materials.** Use care when handling these materials per instructions on page 87 of this manual. Failure to comply could result in severe personal injury.

Figure 96 Miscellaneous parts and kits

Item	Description	Part Number
1	Condensate neutralizer kit (up to 3000 MBH)	383-600-076
2	Heat exchanger cleaning tool	591-706-200
3	Pressure relief valve ASME 30 PSI, 1¼" NPT female ASME 50 PSI, 1¼" NPT female ASME 80 PSI, 1¼" NPT female (includes new P/T gauge) ASME 100 PSI, 1¼" NPT female (includes new P/T gauge)	383-600-093 383-600-101 383-600-299 383-600-298
5	Antifreeze, Sentinel X500 (5 gallons) Corrosion inhibitor, Sentinel X100 (5 gallons) Corrosion inhibitor, Sentinel X100 (50 gallons) Inhibitor quick-test kit Cleaner, Sentinel X400 (one tube, 275 ml)	592-900-006 592-900-016 592-900-017 592-900-005 592-900-003
6	Annual maintenance kit consisting of: (1) ignitor (2) washers for ignitor (2) blower connection gaskets (2) ignitor/flame sensor gasket (1) flame sensor (1) length of silicone cord for cleanout plate (4) screws for ignitor/sensor (1) inhibitor test kit	383-600-225
7	Pressure/Temperature Gauge 1/4 NPT 0-75 PSI (for 30 - 50 PSIG relief valves) Pressure/Temperature Gauge 1/4 NPT 0-150 PSI (for 80 - 100 PSIG relief valves)	380-000-000 570-218-055
8	SlimFit Vent/Air Adapter 6 Inch CPVC/PVC – Converts boiler connection to CPVC/PVC diameter.	560-907-739
9	SlimFit Vent/Air Adapter 8 Inch CPVC/PVC – Converts boiler connection to CPVC/PVC diameter.	560-907-738
10	Temperature Sensor Mini Immersion 12k ohm with 4 inch Well 1/2 NPT	511-724-299

Vent/air piping components

Vent Manufacturer	Vent Type	Adapter Description	Vent Mfr's P/N
Centrotherm	InnoFlue SW Polypropylene	Tapered 10" to 6" reducer	ISTR1006
		Tapered 10" to 8" reducer	ISTR1008
DuraVent	PolyPro Polypropylene	9.85" to 6" PP (Exhaust)	810007177
		9.85" Adapter to 6" PP (Air)	810007178
		9.85" Adapter to 8" PP (Exhaust)	810007179
		9.85" Adapter to 8" PP (Air)	810007180
	FasNSeal AL29-4C	9.85" Adapter to 6" FNS (Exhaust)	810007181
		9.85" Adapter to 6" FNS (Air)	810007182
		9.85" Adapter to 8" FNS (Exhaust)	810007183
		9.85" Adapter to 8" FNS (Air)	810007184
		9.85" Adapter to 10" FNS (Exhaust) (Req'd. for Cat. II)	810009853
Heatfab / Selkirk	SAF-T Vent EZ SEAL AL29-4C	SlimFit adapter to 6"	96WMSF
		SlimFit adapter to 8"	98WMSF
		SlimFit adapter to 10" (Req'd. for Cat. II)	910WMSF
MetalFab Inc.	CORR/Guard AL29-4C	SlimFit adapter to 6"	6FCG9WMA
		SlimFit adapter to 8"	8FCG9WMA
		SlimFit adapter to 10" (Req'd. for Cat. II)	10FCG9WMA
Nova Flex Group	Z-Vent AL29-4C	SlimFit Adaptor 6"	2SVESFA1006
		SlimFit adapter 8"	2SVESFA1008
		SlimFit adapter 10" (Req'd. for Cat. II)	2SVESFA1010

Replacement parts *(continued)*

Go to www.weil-mclain.com to locate Weil-McLain distributors

Figure 97 Jacket parts

Item	Description			Part Number
100	Jacket side post with mounting plate			426-700-330
110	Support frame bracket kit (Frame components, hardware)			383-600-249
120	Jacket top frame kit, SF1000/1500 (Frame, hardware)			383-600-502
130	Jacket top frame kit, SF2000 (Frame, hardware)			383-600-503
140	Jacket corner post, front (Post, hardware)			383-600-258
150	Jacket corner post, back/left			426-700-315
160	Jacket corner post, back/right			426-700-316
170	Jacket top-back, size C, SF1000/1500 (Panel, hardware)			383-600-261
180	Jacket top-back, size D, SF2000 (Panel, hardware)			383-600-262
190	Jacket top-front, size A (Panel, hardware)			383-600-263
200	Jacket top-front center, size B (Panel, plugs, hardware)	1000/1500	2000	383-600-504
210	Jacket access door, size B, SF1000/1500 (Panel with handles)	4	2	426-700-325
220	Jacket access door, size C, SF2000 (Panel with handles)	0	2	426-700-326
230	Jacket panel top with display opening (Hardware included)	1	2	383-600-505
240	Jacket panel bottom (Hardware included)			383-600-506
250	Door panel rear, Left hand			426-700-327
260	Door panel rear, Right hand			426-700-328
na	Display panel assembly kit (Hardware included) (*see pages 112 & 113*)			383-600-501
280	Display panel bezel, plastic (Hardware included)			383-600-507

Replacement parts *(continued)*

Figure 98 Jacket parts

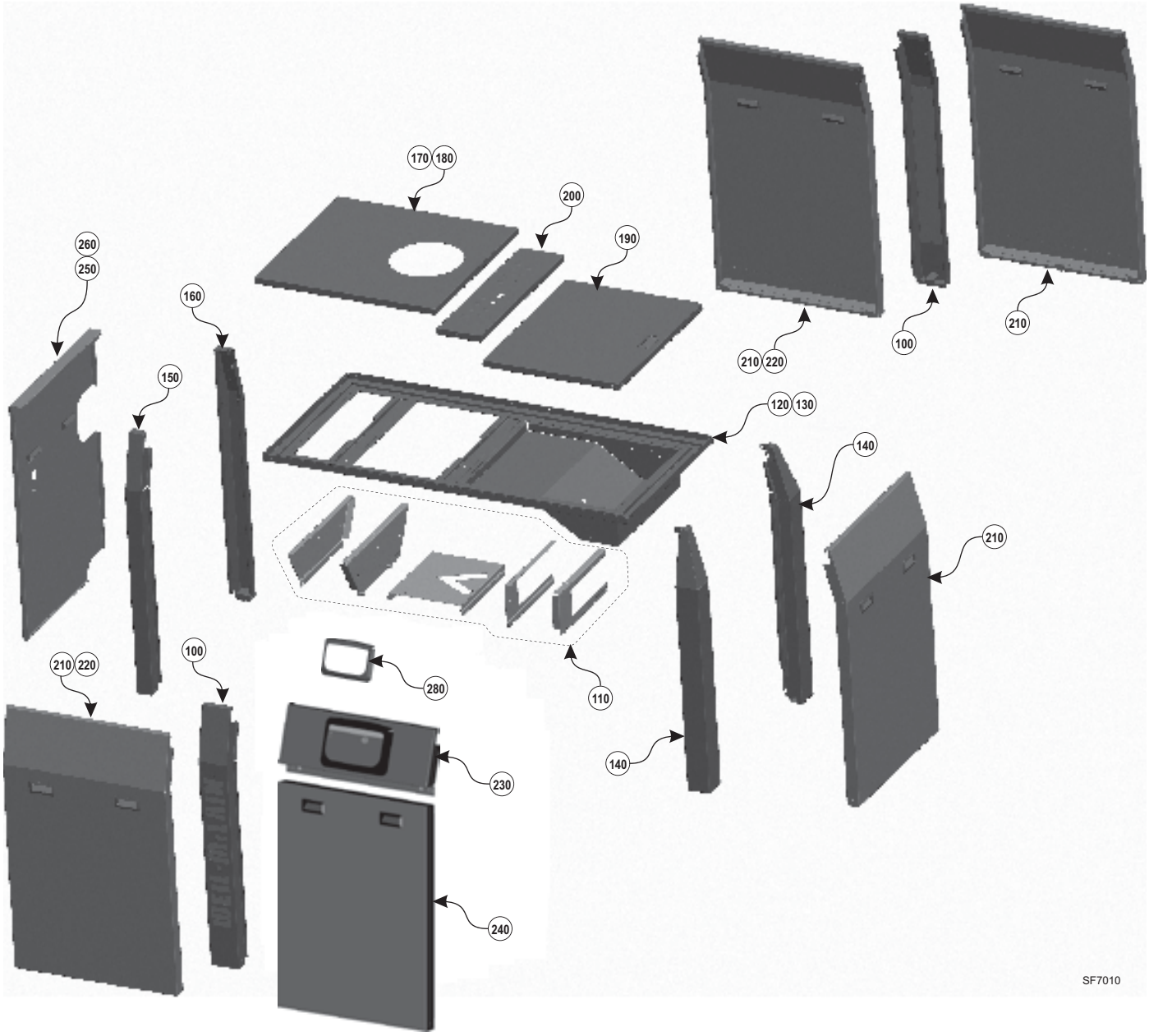

Replacement parts *(continued)*

Go to www.weil-mclain.com to locate Weil-McLain distributors

Figure 99 Heat exchanger

Item	Description	Part Number
100	Silicone cord, 10 mm x 100 meters	383-600-201
110	Cleanout plate gasket kit, SF1000 (gasket, silicone sealing cord, hardware)	383-600-202
120	Cleanout plate gasket kit, SF1500 (gasket, silicone sealing cord, hardware)	383-600-203
130	Cleanout plate gasket kit, SF2000 (gasket, silicone sealing cord, hardware)	383-600-204
140	Bottom frame, SF1000/1500 (Frame, casters, hardware, o-ring, silicone sealing cord, silicone sealant)	383-600-205
150	Bottom frame, SF2000 (Frame, casters, hardware, o-ring, silicone sealing cord, silicone sealant)	383-600-206
160	Flue collector base kit, SF1000/1500 (Flue collector, silicone sealing cord, silicone sealant, hardware)	383-600-207
170	Flue collector base kit, SF2000 (Flue collector, silicone sealing cord, silicone sealant, hardware)	383-600-208
180	Flue collar adapter kit, SF1000 (Adapter, silicone sealing cord, gasket, o-ring, flue temperature sensor, hardware)	383-600-209
190	Flue collar adapter kit, SF1500 (Adapter, silicone sealing cord, gasket, o-ring, flue temperature sensor, hardware)	383-600-210
200	Flue collar adapter kit, SF2000 (Adapter, silicone sealing cord, gasket, o-ring, flue temperature sensor, hardware)	383-600-211
210	Heat exchanger front section (Section, silicone sealant, o-rings, hardware)	383-600-212
220	Heat exchanger intermediate sections (Section, silicone sealant, o-rings, hardware)	383-600-213
230	Heat exchanger back section (Section, silicone sealant, o-rings, hardware)	383-600-214
240	Heat exchanger, complete, assembled, SF1000	383-600-215
250	Heat exchanger, complete, assembled, SF1500	383-600-216
260	Heat exchanger, complete, assembled, SF2000	383-600-217
270	Return distribution tube, blank, SF1000 (Tube, flange, o-ring, hardware)	383-600-218
280	Return distribution tube, blank, SF1500 (Tube, flange, o-ring, hardware)	383-600-219
290	Return distribution tube, blank, SF2000 (Tube, flange, o-ring, hardware)	383-600-220
300	Return distribution tube, perforated, SF1000 (Tube, flange, o-ring, hardware)	383-600-221
310	Return distribution tube, perforated, SF1500 (Tube, flange, o-ring, hardware)	383-600-222
320	Return distribution tube, perforated, SF2000 (Tube, flange, o-ring, hardware)	383-600-223
330	Supply cover plate with LWCO port (plate, o-ring, hardware)	383-600-509
340	Return cover plate, blank (plate, o-ring, hardware) (Not shown)	383-600-228
350	Return manifold with flange, SF2000 (Manifold, flange, o-ring, temperature sensor, sealant)	383-600-229
360	Return manifold with flange, SF1500 (Manifold, flange, o-ring, temperature sensor, sealant)	383-600-276
370	Return manifold with flange, SF1000 (Manifold, flange, o-ring, temperature sensor, sealant)	383-600-277
380	Supply manifold with flange, SF2000 (Manifold, flange, o-ring, temperature sensor, sealant)	383-600-230
390	Supply manifold with flange, SF1500 (Manifold, flange, o-ring, temperature sensor, sealant)	383-600-278
400	Supply manifold with flange, SF1000 (Manifold, flange, o-ring, temperature sensor, sealant)	383-600-279
410	Bottom end rail kit	383-600-248
420	Caster kit, non-swivel (Caster, hardware)	383-600-270
430	Caster kit, swivel (Caster, hardware)	383-600-271
440	Leveling leg kit (Leveling leg, adapter)	383-600-272
460	Support frame bracket (Frame, hardware) (Not shown)	383-600-289
470	Hex head plug, 1/8 BSP, SS (Not shown)	561-431-484
480	Condensate trap assembly	560-907-749
NS	Condensate trap coupling (not shown)	561-013-872

Replacement parts *(continued)*

Figure 100 Heat exchanger

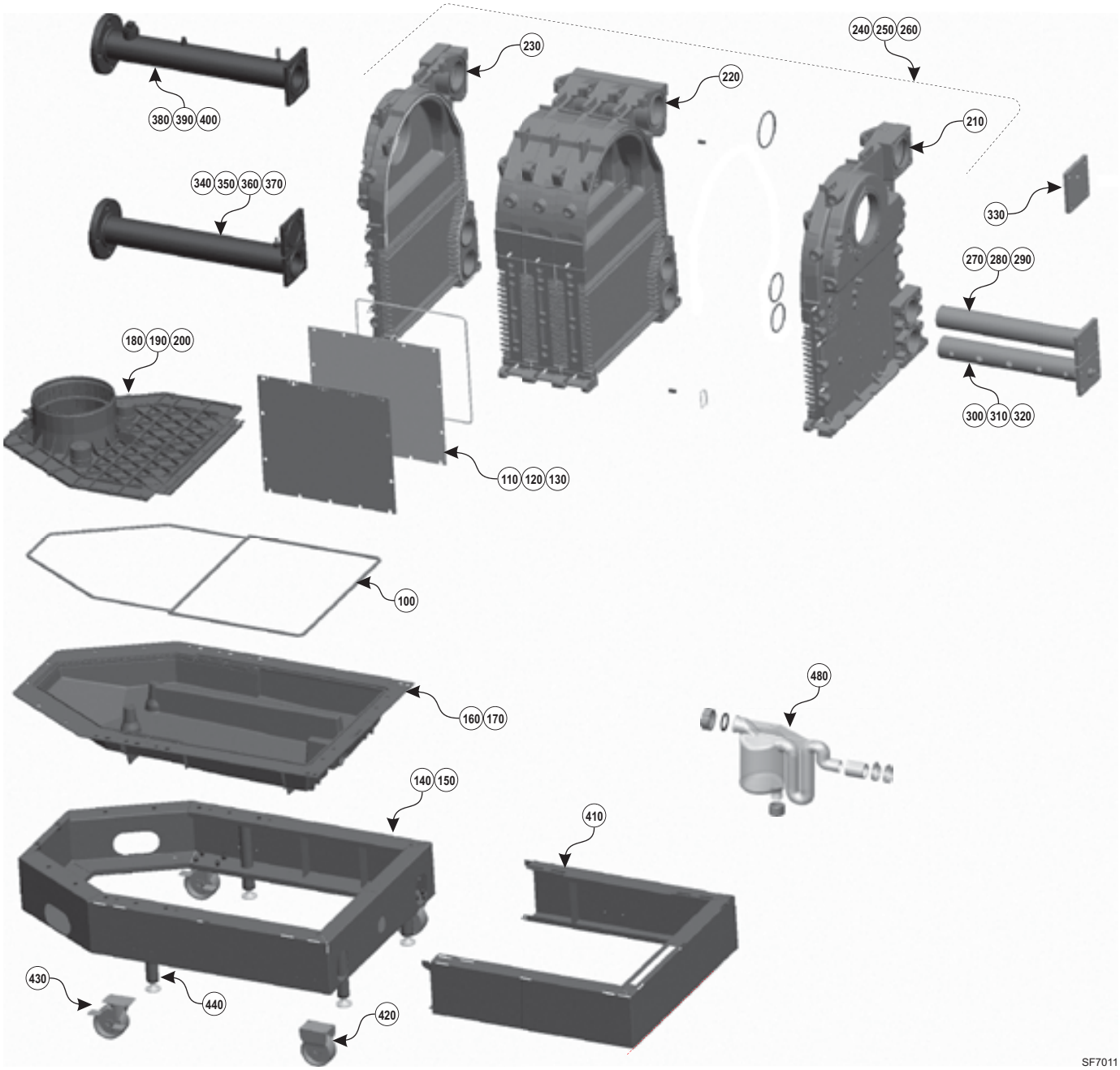

Replacement parts *(continued)*

Go to www.weil-mclain.com to locate Weil-McLain distributors

Figure 101 Burner, blower, venturi and gas train

Item	Description	Part Number
100	Piping end combustion chamber access plate kit (plate, gasket, insulation, hardware) (Not shown)	383-600-231
110	Burner kit, SF2000 (burner, insulation ring, plate, hardware)	383-600-232
120	Burner kit, SF1500 (burner, insulation ring, plate, hardware)	383-600-280
130	Burner kit, SF1000 (burner, insulation ring, plate, hardware)	383-600-281
140	Burner cover plate kit (plate, insulation, hardware) (Not shown)	383-600-233
150	Mixing tube kit (Mixing tube, flapper valve, gasket, hardware)	383-600-234
160	Flapper valve kit (flapper valve, hardware)	383-600-235
170	Blower kit, SF2000 (blower, o-ring, hardware)	383-600-236
180	Blower kit, SF1500 (blower, o-ring, hardware)	383-600-282
190	Blower kit, SF1000 (blower, o-ring, hardware)	383-600-283
200	Venturi kit, SF2000 (venturi, o-ring, gasket, hardware)	383-600-237
210	Venturi kit, SF1500 (venturi, o-ring, gasket, hardware)	383-600-284
220	Venturi kit, SF1000 (venturi, o-ring, gasket, hardware)	383-600-285
230	Gas manifold, SF1000L (Manifold, gasket, manual gas valve, o-rings, hardware)	383-600-238
270	Gas manifold, SF1000R (Manifold, gasket, manual gas valve, o-rings, hardware)	383-600-239
280	Gas manifold, SF1500L (Manifold, gasket, manual gas valve, o-rings, hardware)	383-600-240
290	Gas manifold, SF1500R (Manifold, gasket, manual gas valve, o-rings, hardware)	383-600-241
300	Gas manifold, SF2000L (Manifold, gasket, manual gas valve, o-rings, hardware)	383-600-242
310	Gas manifold, SF2000R (Manifold, gasket, manual gas valve, o-rings, hardware)	383-600-243
320	Manual gas valve, T-handle, SF1000/1500	383-600-244
330	Manual gas valve, T-handle, SF2000	383-600-245
340	Automatic gas valve kit, SF1000 (Automatic valve, plastic reference line tubing, hardware)	383-600-246
350	Automatic gas valve kit, SF1500/2000 (Automatic valve, plastic reference line tubing, hardware)	383-600-286
360	Air inlet box kit (Box, hardware)	383-600-251
370	Air inlet hose kit (Hose, hardware)	383-600-252
390	Gas manifold pipe kit, SF1000L (Pipe, sealant, gasket, hardware)	383-600-291
400	Gas manifold pipe kit, SF1000R (Pipe, sealant, gasket, hardware)	383-600-292
410	Gas manifold pipe kit, SF1500L (Pipe, sealant, gasket, hardware)	383-600-293
420	Gas manifold pipe kit, SF1500R (Pipe, sealant, gasket, hardware)	383-600-294
430	Gas manifold pipe kit, SF2000L (Pipe, sealant, gasket, hardware)	383-600-295
440	Gas manifold pipe kit, SF2000R (Pipe, sealant, gasket, hardware)	383-600-296
450	Orifice plate SF1000 SF1500 SF2000	 383-600-301 383-600-302 383-600-303
460	Acoustic adapter, SF1000 only	383-600-307

Replacement parts *(continued)*

Figure 102 Burner, blower, venturi and gas train

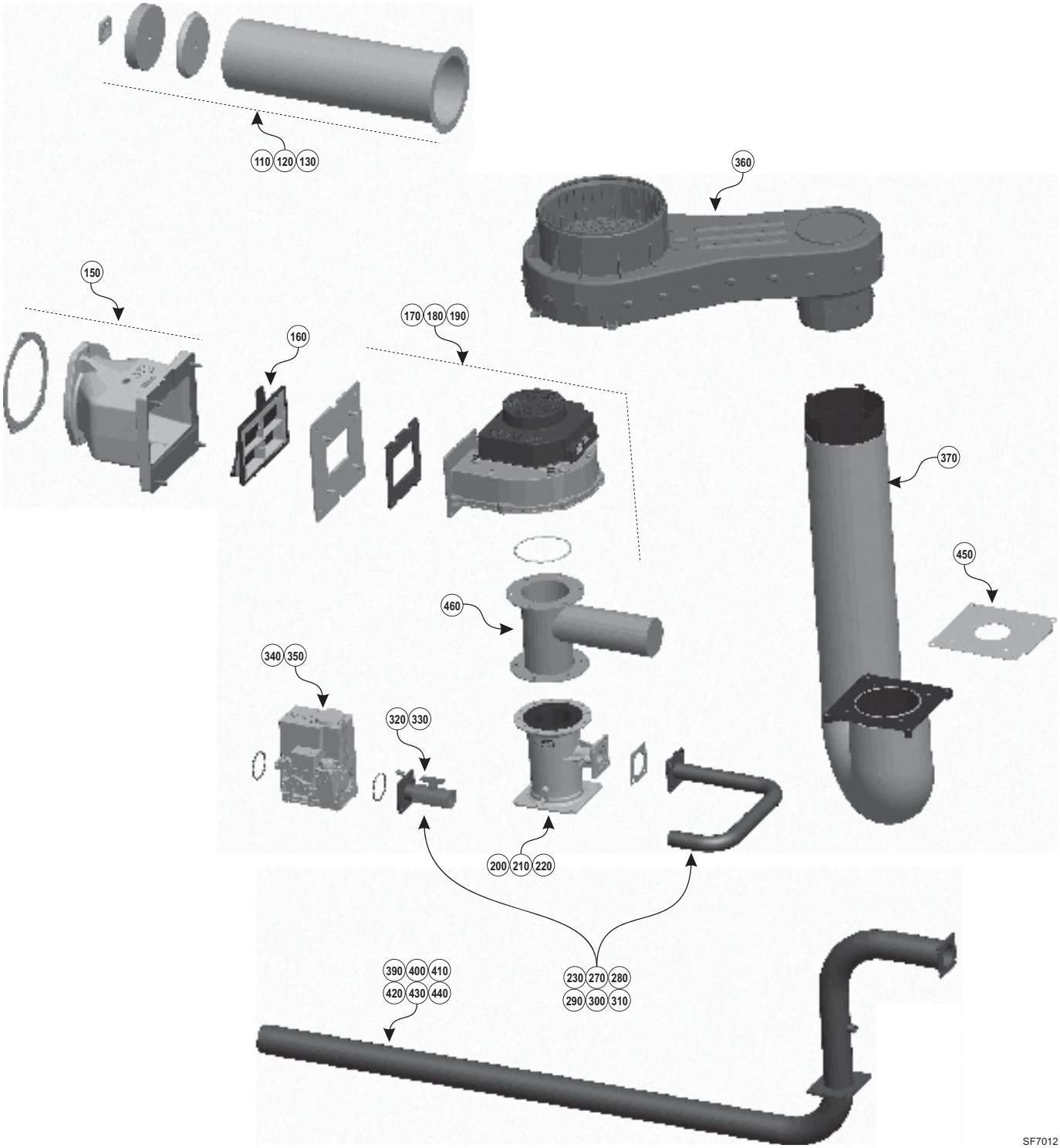

Replacement parts *(continued)*

Figure 103 Controls

Item	Description	Part Number
100	Display panel assembly kit	383-600-501
110	Ignitor kit (ignitor, gasket, hardware, ground harness)	383-600-226
120	Gas pressure switch kit (High/low pressure switches, hardware, sealant)	383-600-510
130	Pressure switch kit (Pressure switch, Min air flow switch, hoses, hardware)	383-600-308
140	Control module kit (Module, hardware) (UT 1176-180)	383-600-500
150	Control transformer, 120/24 VAC	383-500-628
160	Blower relay (without socket)	570-350-231
170	Low Water Cut-Off	383-600-511
180	Temperature sensor, Flue (Sensor, gasket)	383-500-600
190	Temperature sensor, single – 1/4” NPT Return Water Sensor	571-724-295
200	Temperature sensor, dual – 1/8” NPT Supply Water Sensor	571-724-297
210	Ignition transformer	511-330-436
220	Expansion module	383-600-160
230	Boiler On/Off switch	383-500-205
240	Flame sensor kit	383-600-300
250	Harness-Wiring Main Top (not shown)	591-392-018
260	Harness-Wiring Blower Control (not shown)	591-392-019
270	Harness-Wiring Aux. Circ (not shown)	591-392-020
280	Harness-Wiring Aux. additional contacts (not shown)	591-392-021
290	Harness-Wiring Aux. field contacts (not shown)	591-392-022
300	Harness-Wiring Flame Sensor (not shown)	591-392-026
310	Harness -Aux. field terminals (not shown)	591-392-027
320	Harness-Wiring Blower Control Lower (not shown)	591-392-037
330	Harness-Wiring High Voltage Lower (not shown)	591-392-038
340	Harness-Wiring Low Voltage Lower (not shown)	591-392-039
350	Harness-Wiring Auxiliary Top (not shown)	591-392-017
360	Harness-Expansion module to display (Cat-se RJ45 not shown)	591-392-040
370	Harness-Control to expansion module (RS485 not shown)	383-500-633
380	Temperature sensor, Outdoor	510-312-218
390	Temperature sensor, System	383-500-601
400	Temperature sensor, Heat Exchanger	511-724-302
410	Flue temperature sensor gasket	590-318-011
420	Fuse 3-amp, fast-blow ATO (5 fuses) (not shown)	383-500-603
430	Fuse 12-amp 250-Volt fast-blow AG (5 fuses) (not shown)	383-500-604

Replacement parts *(continued)*

Figure 104 Controls

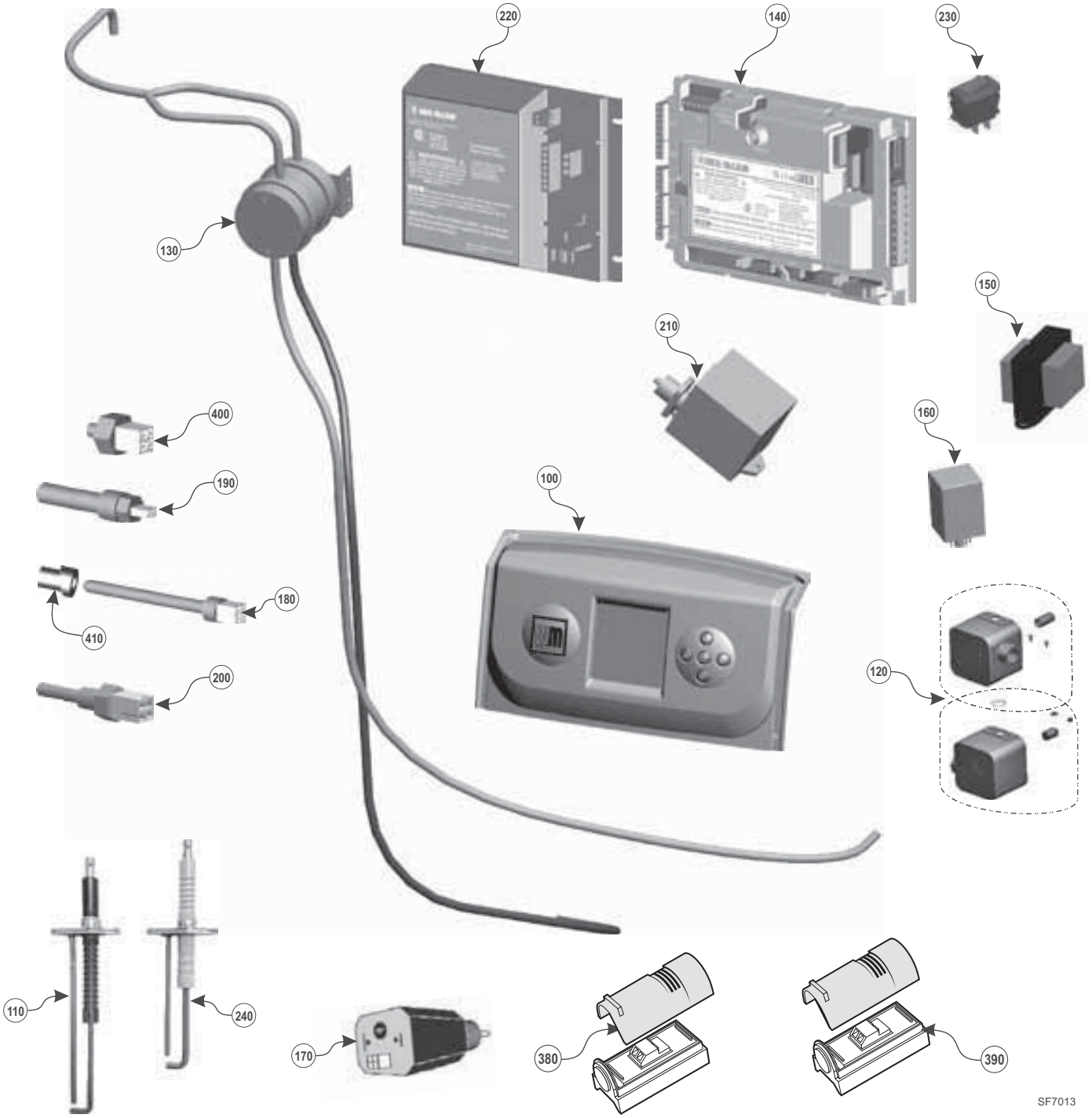

Dimensions

Figure 105 Dimensional data — **LEFT-HAND** configuration

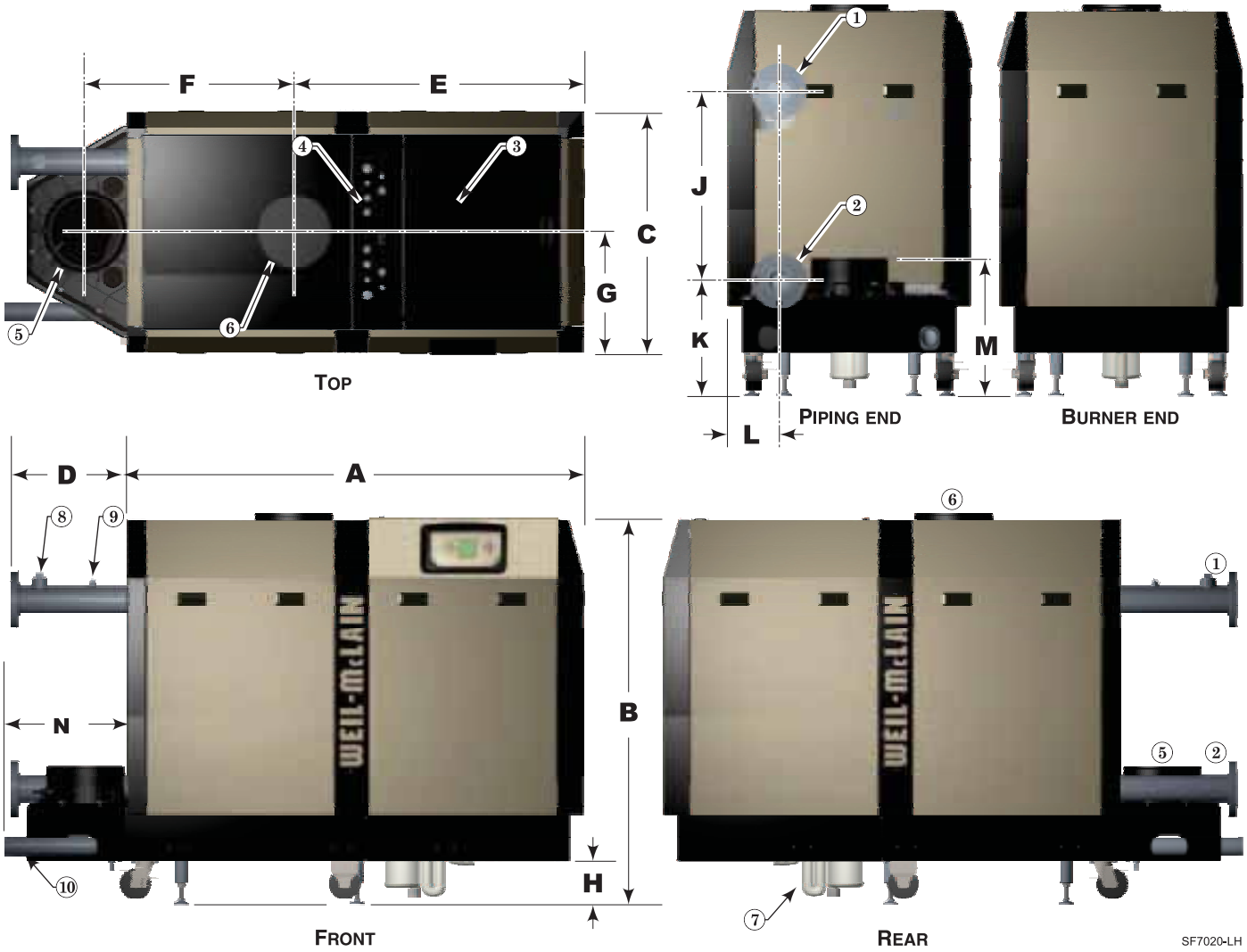

LEGEND					
1	Supply connection, 3” flanged	5	Flue connection, 10” nominal	8	Relief valve connection, 1½” NPT
2	Return connection, 3” flanged	6	Air connection, 10” nominal	9	P/T gauge connection, ½” NPT
3	Control panel	7	Condensate trap (to condensate drain)	10	Gas connection, 2” NPT
4	Electrical entrance knockouts				

DIMENSIONS (inches) (height dimensions based on 5¼-inch spacing from floor to bottom)

Boiler	A	B	C	D	E	F	G	H	J	K	L	M	N
SF1000	61⅜	51¼	32 9/16	15¾	39	28 1/16	16¼	5¼	25½	14 15/16	6⅞	18	16 9/16
SF1500	61⅜	51¼	32 9/16	15¾	39	28 1/16	16¼	5¼	25½	14 15/16	6⅞	18	16 9/16
SF2000	73⅝	51¼	32 9/16	15¾	39	40¼	16¼	5¼	25½	14 15/16	6⅞	18	16 9/16

Dimensions *(continued)*

Figure 106 Dimensional data — **RIGHT-HAND** configuration

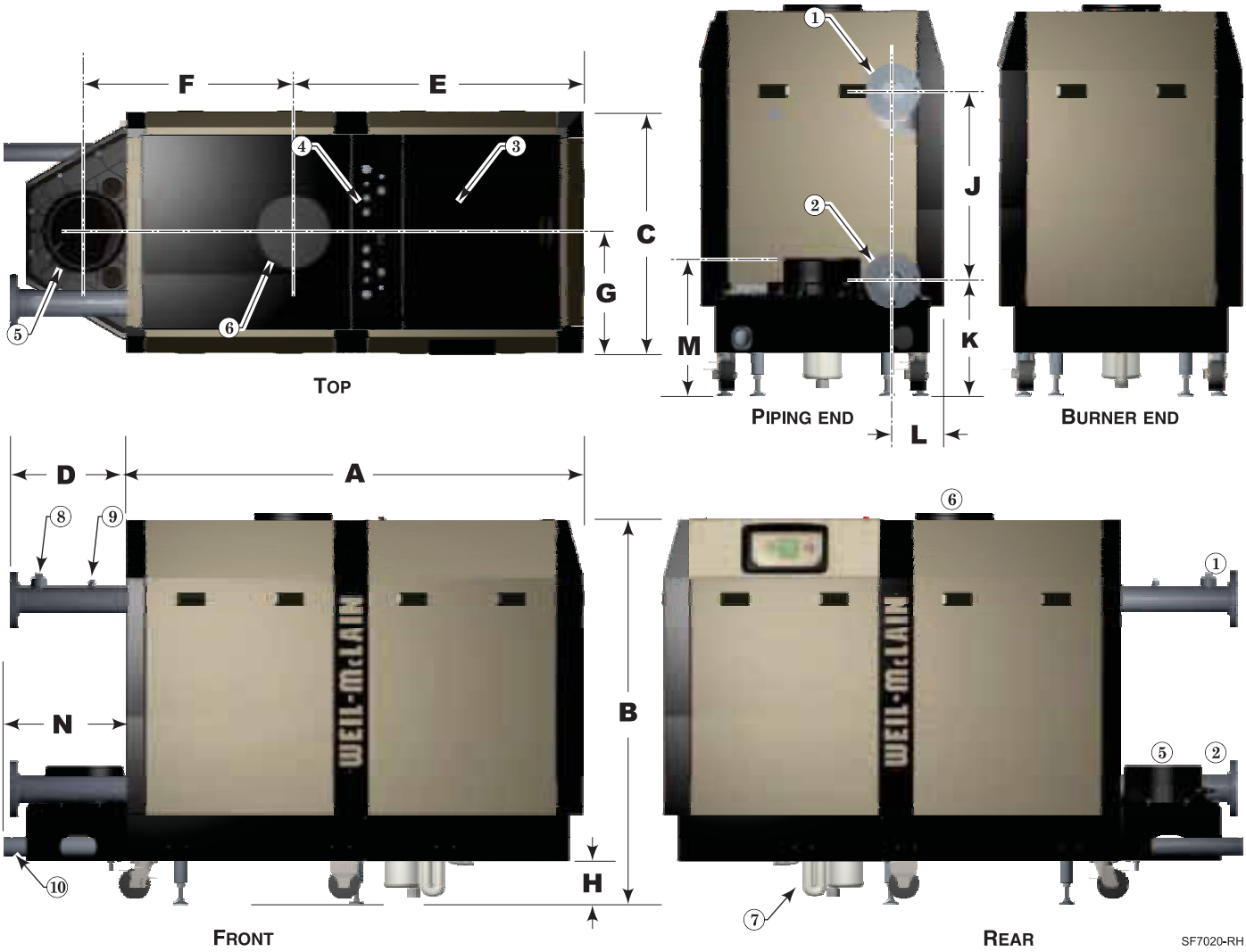

LEGEND					
1	Supply connection, 3" flanged	5	Flue connection, 10" nominal	8	Relief valve connection, 1½" NPT
2	Return connection, 3" flanged	6	Air connection, 10" nominal	9	P/T gauge connection, ½" NPT
3	Control panel	7	Condensate trap (to condensate drain)	10	Gas connection, 2" NPT
4	Electrical entrance knockouts				

DIMENSIONS (inches) (height dimensions based on 5¼-inch spacing from floor to bottom)

Boiler	A	B	C	D	E	F	G	H	J	K	L	M	N
SF1000	61⅜	51¼	32 9/16	15¾	39	28 1/16	16¼	5¼	25½	14 15/16	6⅞	18	16 9/16
SF1500	61⅜	51¼	32 9/16	15¾	39	28 1/16	16¼	5¼	25½	14 15/16	6⅞	18	16 9/16
SF2000	73⅝	51¼	32 9/16	15¾	39	40¼	16¼	5¼	25½	14 15/16	6⅞	18	16 9/16

Ratings — SlimFit Series 2 boilers

Figure 107 Ratings and engineering data

Boiler Model Number	Input	AHRI Ratings: Gross Output	AHRI Ratings: Net Rating	AHRI Ratings: Combustion Efficiency	AHRI Ratings: Thermal Efficiency	Boiler Water Content	Vent/Air Pipe Size	Stack/vent flow rate	Boiler weight (pounds): Dry weight (no water)	Boiler weight (pounds): Operating weight (filled)	Boiler weight (pounds): Shipping weight
	Btuh *(Note 1)*	Btuh *(Note 1)*	Btuh *(Note 2)*	% *(Note 3)*	% *(Note 4)*	Gallons	*Inches (Note 5)*	scfm *(Note 6)*			
SF1000	1,000,000	958,000	833,000	96.1	95.8	13	6, 8 or 10	279	865	975	1,130
SF1500	1,500,000	1,437,000	1,250,000	95.9	95.8	19	8 or 10	418	1,050	1,210	1,310
SF2000	2,000,000	1,906,000	1,657,000	95.8	95.3	25	8 or 10	558	1,250	1,460	1,510

Notes

1	Ratings shown are for sea level applications only. For altitudes above sea level, the SlimFit boiler requires no modifications and automatically de-rates itself by approximately 4% per 1,000 feet above sea level. For elevations over 5,500 feet, see the high altitude section in this manual for required control parameter changes. The length of the vent and air piping will affect the maximum input. See Figure 120, below for derate % vs vent/air piping length.
2	Net AHRI ratings are based on net installed radiation of sufficient quantity for the requirements of the building and nothing need be added for normal piping and pickup. Ratings are based on a piping and pickup allowance of 1.15. An additional allowance should be made for unusual piping and pickup loads.
3	Combustion efficiency is based on AHRI testing procedure BTS-2000, and equal to 100% minus flue loss.

Notes

4	Thermal efficiency is based on AHRI testing procedures BTS-2000.
5	"SlimFit boilers can be direct vent or direct exhaust vented, either through a side wall or through roof, as instructed in this manual and compliant with all local codes. SlimFit Boilers require special venting, consistent with Category IV boiler. Category II, 10" venting requires 10" vent adapter, see pages 27-28 and Figure 96, page 105, "Vent/air piping components" for adapter part numbers. Use only the vent materials and methods identified in this manual."
6	The values are for the stack flow rate at the maximum firing rate for the given boiler. The values can vary depending on the location of the installation and operating conditions.

Figure 108 Derate due to vent/air piping length (graphs show maximum firing rate as % of rated input)

Determine vent/air piping equivalent length (feet) from Figure 24, page 29 — Use the length for L in the equations.

Boiler	Derate % for Direct Exhaust: 6" vent piping	Derate % for Direct Exhaust: 8" vent piping	Derate % for Direct Vent: 6" vent/air piping	Derate % for Direct Vent: 8" vent/air piping
SF1000	Derate % = 0.08 x L Example: If L=75 feet, Derate % = .08 x 75 = 6.0%	NOT ALLOWED	Derate % = 3.0 + (0.08 x L) Example: If L=60 feet, Derate % = 3.0 + .08 x 60 = 7.8%	Derate % = 0.04 x L Example: If L=125 feet, Derate % = .04 x 125 = 5.0%
SF1500	NOT ALLOWED	Derate % = 0.03 x L Example: If L=75 feet, Derate % = .03 x 75 = 2.3%	NOT ALLOWED	Derate % = 0.05 x L Example: If L=80 feet, Derate % = .05 x 80 = 4.0%
SF2000	NOT ALLOWED	Derate % = 0.05 x L Example: If L=95 feet, Derate % = .05 x 95 = 4.8%	NOT ALLOWED	Derate % = 0.07 x L Example: If L=60 feet, Derate % = .07 x 60 = 4.2%

WARNING Failure to follow all instructions can result in flue gas spillage and carbon monoxide emissions, causing severe personal injury or death.

WARNING This document must only be used by a qualified heating installer/service technician. Read all instructions, including this addendum and the Boiler Manual, before installing. Perform steps in the order given. Failure to comply could result in severe personal injury, death or substantial property damage.

NOTICE Installation must comply with local requirements and with the National Fuel Gas Code - ANSI Z223.1/NFPA54 – latest edition for U.S. installations or Natural Gas and Propane Installation Code - CAN/CSA B149.1 for Canadian installations.

Installation and Service Certificate

Boiler Model _____ Series _____ CP Number _____ Date Installed _____

BTU Input _____

- ❑ Installation instructions have been followed.
- ❑ Check-out sequence has been performed.
- ❑ Above information is certified to be correct.
- ❑ Information received and left with owner/maintenance person.

Installer _____ _____

_____ _____

(Company) (Address) (Phone) (Installer's Signature)

Installation and Gas Boiler Data Collection Sheet

Boiler Model / Series SlimFit _____ / **Series** _____		**Date Installed**: _____	
CP Number: _____	Fuel Type: Natural___	BTU Input: _____	
Flame signal on control display at HIGH fire: _____		Flame signal on control display at LOW fire: _____	
Was venturi changed? YES___ NO___	Was gas valve throttle adjusted? YES___ NO___	Was gas valve offset adjusted? YES___ NO___	
Boiler Settings	**Network Settings**	**Priority 1 Settings**	
Boiler Model: SlimFit _____	Boiler Address: ____	System Type:	_____
Control Type: _____	Net Max On Time: _____Min	Target Mod Sensor:	_____
High Altitude: YES___ NO___	Net Min On Time: _____Min	Target Adjust:	_____
	Max Rate On Net: _____%	Supply Max:	_____˚F
	Min Rate On Net: _____%	Supply Min:	_____˚F
Manual Reset High Limit Temp: ____˚F	Rotation & Sequence	OD Reset Max:	_____˚F
WWSD Temp: ____˚F	Sequence Type: _____	OD Reset Min:	_____˚F
Adjust Outdoor: ____˚F	Base Rate High: _____%	Volts For Max:	_____ V
Circulator Exercising	Base Rate Low: _____%	Volts For Min:	_____ V
Circulator 1: ON___ OFF___	Boiler Rotation Type: _____	Boost Time:	_____ Mins
Circulator 2: ON___ OFF___	Rotate Frequency: ____Days	System Off Diff:	_____˚F
Circulator 3: ON___ OFF___	Force Lead Rotation: YES or NO	System On Diff:	_____˚F
Boiler Circ: ON___ OFF___	Modbus Settings	Add BLR Diff:	_____˚F
Freeze Protection	Enable: YES___ NO___	Drop BLR Diff:	_____˚F
Circulator 1: ON___ OFF___	Address: _____	Mod Delay Time:	_____ Mins
Circulator 2: ON___ OFF___	Parity Bit: _____	Stabilization Time:	_____ Mins
Circulator 3: ON___ OFF___	Baud Rate: _____bps	Add Delay Time:	_____Sec
Boiler Circ: ON___ OFF___	Stop Bit: YES___ NO___	Drop Delay Time:	_____Sec
Assign Inputs		Max BLR Temp:	_____˚F
Input 1: Priority___ Aux___ OFF___		Boiler On Diff:	_____˚F
Source: TT1 ___ OR 0-10V ___		Boiler Off Diff:	_____˚F
Input 2: Priority___ Aux___ OFF___		Max On Time:	_____ Mins
Input 3: Priority___ Aux___ OFF___		Run Boiler Pump:	YES___ NO___
		Run Aux Pump/Output:	YES___ NO___
Max Rate Volts: _____V		Pre Pump:	_____Sec
Min Rate Volts: _____V		Post Pump:	_____Sec
Temp Dependent: YES___ NO___		Max Rate:	_____%
ODT Setpoint: ____˚F		Min Rate:	_____%
Activate Contact		Max System BTUs:	_____ MBUTs
below setpoint: 1st____ 2nd____		Min Boilers On:	_____
		Additional Heat Demand:	1st___ 2nd___ OFF__
		Response Time:	_____ Mins
		ODT	YES___ NO___

Installation and Gas Boiler Data Collection Sheet

CO2 @: High Fire_____% Low Fire_____%

CO@: High Fire _____ ppm Low Fire _____ ppm

Natural Gas input rate measured: HIGH _____ CFH / LOW_____ CFH

Priority 2 Settings		Priority 3 Settings		Priority 4 Settings (Multi BLR Sys Only)	
System Type:	_____	System Type:	_____	System Type:	_____
Target Mod Sensor:	_____	Target Mod Sensor:	_____	Target Mod Sensor:	_____
Target Adjust:	_____	Target Adjust:	_____	Target Adjust:	_____
Supply Max:	_____˚F	Supply Max:	_____˚F	Supply Max:	_____˚F
Supply Min:	_____˚F	Supply Min:	_____˚F	Supply Min:	_____˚F
OD Reset Max:	_____˚F	OD Reset Max:	_____˚F	OD Reset Max:	_____˚F
OD Reset Min:	_____˚F	OD Reset Min:	_____˚F	OD Reset Min:	_____˚F
Volts For Max:	_____ V	Volts For Max:	_____ V	Volts For Max:	_____ V
Volts For Min:	_____ V	Volts For Min:	_____ V	Volts For Min:	_____ V
Boost Time:	_____ Mins	Boost Time:	_____ Mins	Boost Time:	_____Mins
System Off Diff:	_____˚F	System Off Diff:	_____˚F	System Off Diff:	_____˚F
System On Diff:	_____˚F	System On Diff:	_____˚F	System On Diff:	_____˚F
Add BLR Diff:	_____˚F	Add BLR Diff:	_____˚F	Add BLR Diff:	_____˚F
Drop BLR Diff:	_____˚F	Drop BLR Diff:	_____˚F	Drop BLR Diff:	_____˚F
Mod Delay Time:	_____ Mins	Mod Delay Time:	_____ Mins	Mod Delay Time:	_____Mins
Stabilization Time:	_____ Mins	Stabilization Time:	_____ Mins	Stabilization Time:	_____Mins
Add Delay Time:	_____Sec	Add Delay Time:	_____Sec	Add Delay Time:	_____Sec
Drop Delay Time:	_____Sec	Drop Delay Time:	_____Sec	Drop Delay Time:	_____Sec
Max BLR Temp:	_____˚F	Max BLR Temp:	_____˚F	Max BLR Temp:	_____˚F
Boiler On Diff:	_____˚F	Boiler On Diff:	_____˚F	Boiler On Diff:	_____˚F
Boiler Off Diff:	_____˚F	Boiler Off Diff:	_____˚F	Boiler Off Diff:	_____˚F
Max On Time:	_____ Mins	Max On Time:	_____ Mins	Min On Time:	_____ Mins
Min On Time:	_____ Mins	Run Boiler Pump:	YES___ NO___	Run Boiler Pump:	YES___ NO___
Run Boiler Pump:	YES___ NO___	Run Aux Pump/Output:	YES___ NO___	Run Aux Pump/Output:	YES___ NO___
Run Aux Pump/Output:	YES___ NO___	Pre Pump:	_____Sec	Pre Pump:	_____Sec
Pre Pump:	_____Sec	Post Pump:	_____Sec	Post Pump:	_____Sec
Post Pump:		Max Rate:	_____%	Max Rate:	_____%
Max Rate:	_____%	Min Rate:	_____%	Min Rate:	_____%
Min Rate:	_____%	Max System BTUs:	_____ MBUTs	Max System BTUs:	_____ MBUTs
Max System BTUs:	_____MBUTs	Min Boilers On:	_____	Min Boilers On:	_____
Min Boilers On:	_____	Additional Heat Demand:	1st___ 2nd__ OFF__	Additional Heat Demand:	1st___ 2nd__ OFF__
Additional Heat Demand:	1st___ 2nd__ OFF__	Response Time:	_____ Mins	Response Time:	_____ Mins
Response Time:	_____Mins	ODT	YES___ NO___	ODT	YES___ NO___
ODT	YES___ NO___				

WEIL-McLAIN®

Weil-McLain
500 Blaine Street
Michigan City, IN 46360-2388
http://www.weil-mclain.com