AGS Vic-Flange® Adapter
Style W741

20.04

14-24"/350-600 mm

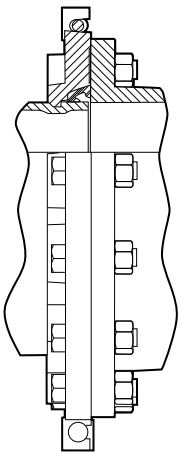

Exaggerated for clarity

Approvals/Listings:

See Victaulic Publication 02.06 for potable water approvals if applicable.

Product Description:

Style W741 AGS (Advanced Groove System) Vic-Flange® adapter is designed for directly incorporating flanged components with ANSI CL. 125/150 bolt hole patterns into an AGS grooved pipe system in sizes 14 – 24"/350 – 600 mm.

Material Specifications:

Housing: Ductile iron conforming to ASTM A 536, grade 65-45-12. Ductile iron conforming to ASTM A 395, grade 65-45-15, is available upon special request.

Housing Coating: Black enamel

☐ **Optional:** Hot dipped galvanized and others.

Gasket: (specify choice[1])

☐ Grade "E" EPDM:

EPDM (Green stripe color code). Temperature range –30°F to +230°F/–34°C to +110°C. May be specified for hot water service within the specified temperature range plus a variety of dilute acids, oil-free air and many chemical services. UL Classified in accordance with ANSI/NSF 61 for cold +73°F/+23°C and hot +180°F/+82°C potable water service and ANSI/NSF 372. NOT COMPATIBLE FOR PETROLEUM SERVICES.

☐ Grade "T" nitrile:

Nitrile (Orange stripe color code). Temperature range –20°F to +180°F/–29°C to +82°C. May be specified for petroleum products, air with oil vapors, vegetable and mineral oils within the specified temperature range. Not compatible for hot water services over +150°F/+66°C or for hot dry air over +140°F/+60°C.

☐ Grade "L" silicone:

Silicone (Red color code). Temperature range –30°F to +350°F/–34° C to +177° C. May be specified for dry heat, air without hydrocarbons to +350°F/+177°C and certain chemical services.

Draw Bolts: 14 – 24"/350 – 600 mm only: Heat-treated Zinc electroplated carbon steel, trackhead meeting the physical and chemical requirements of ASTM A-449 and physical requirements of ASTM A-183.

[1] Services listed are General Service Guidelines only. It should be noted that there are services for which these gaskets are not compatible. Reference should always be made to the latest Victaulic Gasket Selection Guide for specific gasket service guidelines and for a listing of services which are not compatible.

Job/Owner

System No.	
Location	

Contractor

Submitted By	
Date	

Engineer

Spec Section	
Paragraph	
Approved	
Date	

 © 2014 Victaulic Company. All rights reserved.

Dimensions:

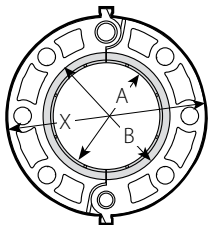

Note: Shaded area of mating face must be free from gouges, undulations or deformities of any type for effective sealing.

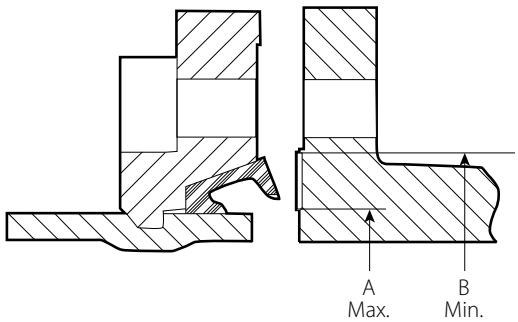

Exaggerated for clarity

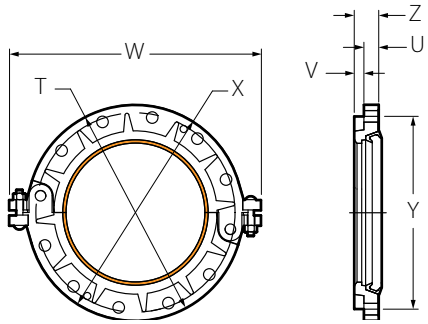

Nominal Size	Actual Out. Dia.	Max. Working Pressure [2] psi/kPa		Max. End Load* Lbs./N		Assembly Bolts [3]		Draw Bolts [4]		Sealing Surface – Inches/mm		Dimensions – Inches/mm							Approx. Weight Each
inches mm		Std. Wall	Light Wall [5]	Std. Wall	Light Wall	[3] No. Bolts Req'd.	Size Inches	No. Bolts	Size Inches	"A" Max.	"B" Min.	T	U	V	W	X	Y	Z	Lbs. kg
14 350	14.000 355.6	300 2065	300 2065	46180 205501	46180 205501	12	1 x 4½	2	⅝ x 3½	14.00 356	16.00 406	19.4 493	1.44 37	0.94 24	24.5 622	21.0 533	18.75 476	2.38 60	66 30
16 400	16.000 406.4	300 2065	300 2065	60315 268402	60315 268402	16	1 x 4½	2	⅝ x 3½	16.00 406	18.00 457	21.5 546	1.44 37	0.94 24	27.1 688	23.5 597	21.25 540	2.38 60	81 37
18 450	18.000 457.0	300 2065	300 2065	76340 339713	76340 339713	16	1⅛ x 4¾	2	¾ x 4¼	18.00 457	20.00 508	22.3 566	1.56 40	1.00 25	29.0 737	25.0 635	22.75 578	2.56 65	84 38
20 500	20.000 508.0	300 2065	300 2065	94250 419413	94250 419413	20	1⅛ x 5¼	2	¾ x 4¼	20.00 508	22.00 559	24.0 610	1.69 43	1.00 25	31.5 800	27.5 698	25.00 635	2.69 68	110 50
24 600	24.000 610.0	300 2065	232 1600	135715 603932	101785 452943	20	1¼ x 5¾	2	¾ x 4¼	24.00 610	26.00 660	29.0 737	1.94 49	0.80 20	36.0 914	32.0 813	29.50 749	2.74 70	155 70

[2] Working Pressure and End Load are total, from all internal and external loads, based on carbon steel pipe AGS roll grooved in accordance with Victaulic specifications. Contact Victaulic for performance on other pipe.

WARNING: FOR ONE TIME FIELD TEST ONLY, the Maximum Joint Working Pressure may be increased to 1 ½ times the figures shown.

[3] Total bolts required to be supplied by installer, may be ordered from Victaulic. Bolt sizes for conventional flange-to-flange connection. Longer bolts required when Vic-Flange utilized with wafer-type valves.

[4] Draw bolts supplied with 14 – 24"/350 – 600 mm Vic-Flange adapters.

[5] Lightwall 14"/350 mm = 0.22"/5.6 mm; 16 – 24"/400 – 600 mm = 0.25"/6.35 mm

IMPORTANT NOTE: Style W741 AGS Vic-Flange adapter provides rigid joints when used on pipe with AGS groove dimensions and consequently allows no linear or angular movement at the joint.

 © 2014 Victaulic Company. All rights reserved.

AGS Vic-Flange Adapter Notes:

Style W741 AGS Vic-Flange Adapter

AGS Vic-Flange Adapters must be assembled so there is no interference with mating components.

Because of the outside flange dimensions, AGS Vic-Flange Adapters must not be used within 90° of one another on an AGS fitting.

When wafer or lug-type valves are used adjoining a Victaulic AGS fitting, check disc dimensions to ensure proper clearance.

AGS Vic-Flange Adapters must not be used as anchor points for tie rods across non-restrained joints.

Mating AGS Vic-Flange Adapters to rubber-faced flanges, valves, etc. requires the use of a Vic-Flange Washer. Refer to the "AGS Vic-Flange Washer Notes" section on the following page.

The face of the mating flange must be free from gouges, undulations, and deformities of any type for proper sealing. Refer to the AGS Vic-Flange Adapter installation instructions for complete information.

The lettering on the outside of the gasket must face the gasket pocket of the AGS Vic-Flange Adapter. When installed correctly, the lettering on the gasket will not be visible.

When mating two AGS Vic-Flange Adapters in 14 – 24"/355.6 – 610.0 mm sizes, the draw bolt locations must be staggered, and a transition ring must be used between the two Vic-Flange Adapters.

STANDARD, FULL-SHANK DIAMETER ASSEMBLY BOLTS ARE REQUIRED FOR PROPER INSTALLATION OF AGS VIC-FLANGE ADAPTERS.

Vic-Flange Washer Notes:

Style W741 AGS Vic-Flange Adapter

AGS Vic-Flange Adapters require a smooth, hard surface at the mating flange face for proper sealing. Some applications, for which the AGS Vic-Flange Adapter is otherwise well suited, do not provide an adequate mating surface. In such cases, a metal Vic-Flange Washer is recommended for insertion between the AGS Vic-Flange Adapter and the mating flange to provide the necessary sealing surface. To ensure the proper Vic-Flange Washer is supplied, always specify the product style and size when ordering.

When mating to a serrated flange – a flange gasket should be used against the serrated flange. The Vic-Flange Washer should then be inserted between the AGS Vic-Flange Adapter and the flange gasket.

When mating to a wafer-type valve that is rubber lined and partially rubber faced (smooth or not) – the Vic-Flange Washer should be placed between the valve and the AGS Vic-Flange Adapter.

When mating to a rubber-faced flange, valve, etc. – the Vic-Flange Washer must be placed between the Vic-Flange Adapter and the rubber-faced flange.

When mating to components (valves, strainers, etc.) where the component flange face has an insert – follow the same arrangement as if the AGS Vic-Flange Adapter was being mated to a serrated flange. Refer to application "A" above.

When mating AWWA cast flanges to IPS flanges – the Vic-Flange Transition Ring is placed between the two Vic-Flange Adapters with the draw bolt locations staggered. If one flange is not a Vic-Flange Adapter (i.e. flanged valve), a flange gasket must be placed against that flange. The Vic-Flange Washer must then be inserted between the flange gasket and the Vic-Flange gasket.

NOTE: Transition Rings, rather than Vic-Flange Washers, must be used when mating Style W741 AGS Vic-Flange Adapters to Style 341 Vic-Flange Adapters in sizes 14 – 24"/355.6 – 610.0 mm.

Installation
Reference should always be made to the I-100 Victaulic Field Installation Handbook for the product you are installing. Handbooks are included with each shipment of Victaulic products for complete installation and assembly data, and are available in PDF format on our website at www.victaulic.com.

Warranty
Refer to the Warranty section of the current Price List or contact Victaulic for details.

Note
This product shall be manufactured by Victaulic or to Victaulic specifications. All products to be installed in accordance with current Victaulic installation/assembly instructions. Victaulic reserves theright to change product specifications, designs and standard equipment without notice and without incurring obligations.

Trademarks
Victaulic is a registered trademark of Victaulic Company.

 © 2014 Victaulic Company. All rights reserved.