EFX-150-BAT-CP-0.5GPM-MLM-IR-FCT

(General Model Name: EFX150.000.0000)

CODE NUMBER

3324025

DESCRIPTION

Battery Power Supply, Mixer Not Included, Polished Chrome Finish, 0.5 gpm, Multi-Laminar Spray, Infrared Sensor, BASYS® Battery-Powered Deck-Mounted High Body Faucet.

DETAILS

- Flow Rate: 0.5 gpm (2 Lpm) (0.5GPM)
- Spray Type: Multi-Laminar (MLM)
- Sensor Type: Infrared (IR)
- Mounting Type: Single Hole ()
- Power Supply: Battery (BAT)
- Temperature Mixer: Mixer Not Included ()
- Finish: Polished Chrome (CP)
- Factory Default Timeout: 10s
- Factory Default GPC: 0.083

FEATURES

Commercial Grade, ADA Compliant, Electronic, Sensor-Activated, Die-CastMetal Hand Washing Faucet with the following features:

- One tool service
- All wetted components to be stainless steel, engineered thermoplastic, EPDM, and copper or copper alloy
- Solenoid housed in removable carrier that includes supply strainer
- Integral water supply shut off
- Supply strainer serviceable from above deck
- Vandal resistant spray insert, key housed inside faucet body
- All electronics sealed to IP-67
- Gold plated electrical contacts
- Above deck individual diagnostic indicators for battery life, solenoid condition, and power up mode
- Flexible, high pressure supply hoses, 3/8” compression connections
- Bi-stable magnetic solenoid
- Four (4) “AA” alkaline batteries
- Double infrared sensors with automatic setting feature Includes all mounting hardware
- Line purge mode, eliminates stagnant water
- Adjustable time-outs
- Standard Bowed Crown

ELECTRICAL SPECIFICATIONS

- Battery Life: 3 years 8,000 cycles/month
  - Optional power harvesting significantly extends service life
- Self-Adjustment Range: 0" (0mm)
- Sensor Range: 0" (0mm)
- Timeout Adjustment Settings: 10s

VIDEOS

BASYS® Faucet Installation and Features

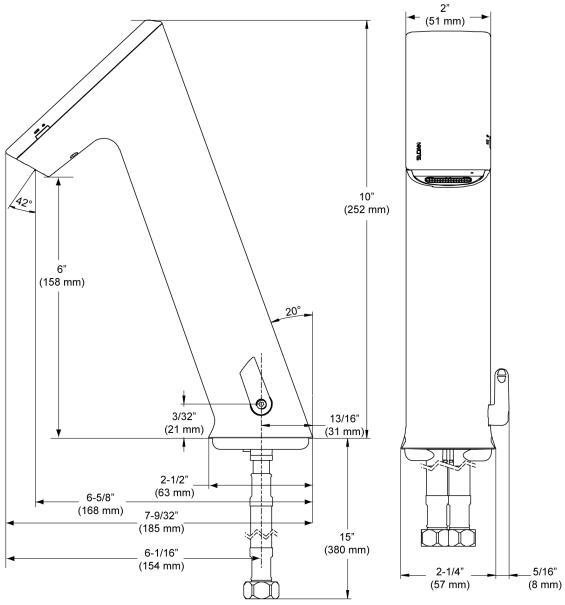

COMPLIANCES & CERTIFICATIONS

(ADA Compliant, ASME A112.18.1 Compliant, CalGreen Compliant, CEC Compliant, cUPC Certified, cUPC Low Lead Compliant, NYC604.4, Proposition 65, Satisfies LEED Credits, TAS, UPC Certified, UPC Low Lead Compliant)

RECOMMENDED SPECIFICATION

Sloan BASYS Model No. EFX-150-BAT-CP-0.5GPM-MLM-IR-FCT Infrared Sensor Activated Electronic Handwashing Faucet for pretempered or hot/cold water supplies. Product to have double infrared sensors with automatic setting feature. Solenoid valve housed in removable carrier that closes water supply upon removal eliminating, need to access control stops. Solenoid carrier includes strainer for easy above deck service.

Sloan 10500 Seymour Ave, Franklin Park, IL 60131
Phone: 800.982.5839 • Fax: 800.447.8329 • sloan.com

Sloan Connect App®

DOWNLOADS

- EFX 1Xx/2Xx Installation Instructions
- EFX 1Xx/2Xx (SP) Installation Instructions
- EFX 1Xx/2Xx Caddy Replacement Installation Instructions
- IR FAQs Repair and Maintenance Guide
- IR FAQs SP Repair and Maintenance Guide
- EFX-1XX Repair and Maintenance Guide
- Trim Plate Guide
- Additional Downloads

Thermostatic mixer ordered separately to comply with ASSE 1070 requirements. The product shall be tested and certified to industry standards: ASME A112.18.1M, CSA B125.1, California Health and Safety Code 116875

NOTES

All information contained within this document subject to change without notice.

Looking for other variations of the EFX-150 product? View the general spec sheet with all options.

Find a matching soap dispenser for this faucet.
Find a compatible sink for this faucet.

WARRANTY

3 Year

ROUGH-IN

EFX-150.00X.0X0X Faucet
with Single Line Water Supply

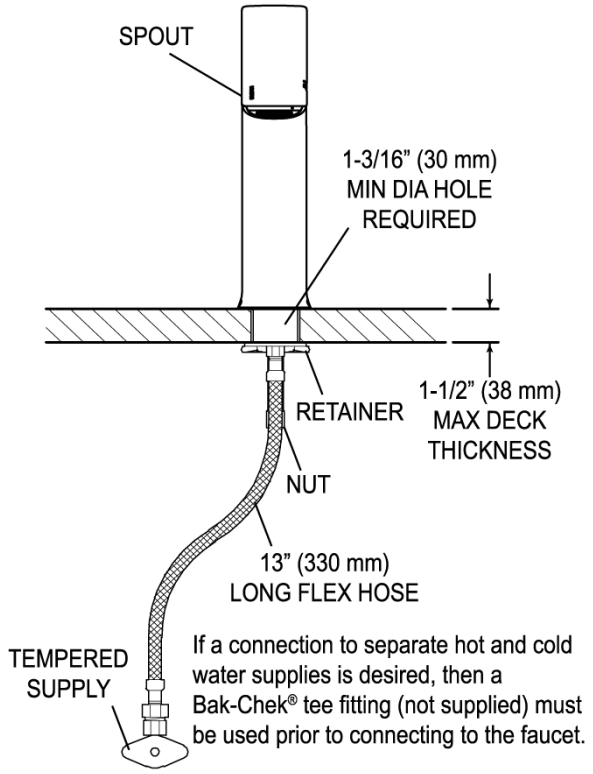

EFX-150.50X.0X0X Faucet
with Hot & Cold Water Supply

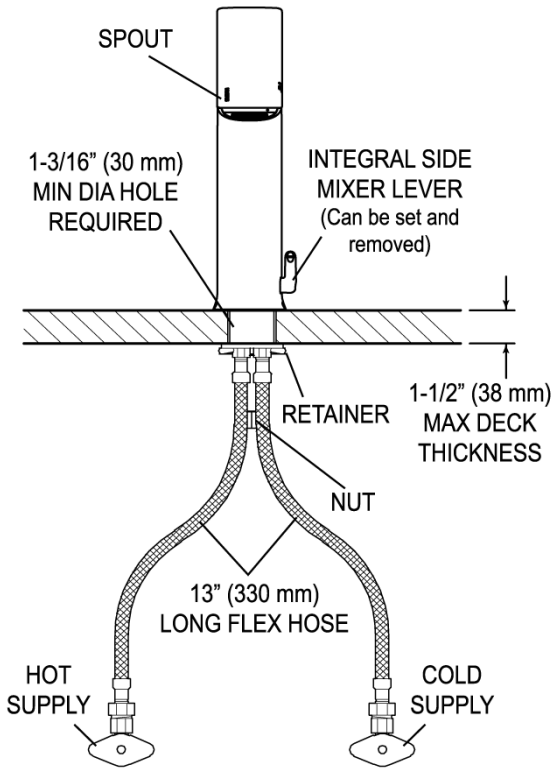

Sloan 10500 Seymour Ave, Franklin Park, IL 60131
Phone: 800.982.5839 • Fax: 800.447.8329 • sloan.com