SAMSUNG

SINGLE
Technical Data Book

Cassette (R32, Cooling only)

Model : CNG***DD (AC***DN*DCG/AA), CXF**SCD (AC0**DXSCCF/AA)

History

Version	Modification	Date	Remark
Ver.1.0	Released Single Cassette Cooling only TDB	24. 09. 05	
Ver.1.1	Modified some data.	24. 12. 09	

Nomenclature

US Code

Model Name

C	N	G	36	4	D	D
(1)	(2)	(3)	(4)	(5)	(6)	(7)

(1) Classification

C	CAC

(2) Product Type

N	Indoor Unit
X	Outdoor Unit

(3) Mode

F	Cooling Only (R32)
G	Heat Pump (R32)

(4) Capacity

X1,000 Btu/h (2 digits)

(5-1) Product Notation (Indoor Unit)

1	1 Way Cassette / Wind-Free 1Way Cassette
N	4 Way Cassette (600x600) Wind-Free 4 Way Cassette (600x600)
4	4 Way Cassette, 360 Cassette Wind-Free 4 Way Cassette
L	LSP Duct
H	HSP Duct
C	Ceiling
J	Console
A	AR9500 (Wall Mounted)
T	MAX4 (Wall Mounted)
Z	Multi-position AHU

(5-2) Feature1 (Outdoor Unit)

A	Inv+Side+General Temp
S	Inv+Side+Low Temp
Q	Inv+Side+Tropical Temp
F	Inv+Top+Tropical Temp

(6) Feature

F	Flagship
S	Standard
D	Deluxe
P	Premium
C	Deluxe + Low Temp.

(7) Version

D	2024

Nomenclature

Indoor Unit

Model Name

AC	036	D	N	4	D	C	G	/	AA
(1)	(2)	(3)	(4)	(5)	(6)	(7)	(8)		Buyer

(1) Classification

AC	CAC

(2) Capacity

X1,000 Btu/h (3 digits)

(3) Version

D	2024

(4) Product Type

N	Indoor Unit
X	Outdoor Unit

(5) Product Notation

1	1 Way Cassette
N	4 Way Cassette (600x600) Wind-Free 4 Way Cassette (600x600)
4	4 Way Cassette, 360 Cassette Wind-Free 4 Way Cassette
L	LSP Duct
H	HSP Duct
C	Ceiling
J	Console
A	AR9500 (Wall Mounted)
T	MAX4 (Wall Mounted)
Z	Multi-position AHU

(6) Feature

F	Flagship
S	Standard
D	Deluxe
P	Premium

(7) Rating Voltage

C	1Φ, 208-230V,60Hz

(8) Mode

F	Cooling Only (R32)
G	Heat Pump (R32)

Nomenclature

Outdoor Unit

Model Name

AC	036	D	X	S	C	C	F	/	AA
(1)	(2)	(3)	(4)	(5)	(6)	(7)	(8)		Buyer

(1) Classification

AC	CAC

(2) Capacity

x 1000 Btu/h (3 digits)

(3) Version

D	2024

(4) Product Type

N	Indoor Unit (NASA)
X	Outdoor Unit (NASA)

(5) Feature1

A	Inv+Side+General Temp
S	Inv+Side+Low Temp
Q	Inv+Side+Tropical Temp
F	Inv+Top+Tropical Temp

(6) Feature2

F	Flagship
S	Standard
D	Deluxe
P	Premium
C	Deluxe + Low Temp.

(7) Rating Voltage

C	1Φ, 208~230V, 60Hz
H	3Φ, 400V, 60Hz

(8) Mode

F	Cooling Only (R32)
G	Heat Pump (R32)

Contents

Wind-Free 4Way Cassette 7

Outdoor Unit 23

Wind-Free 4Way Cassette

1. Line-up 8
2. Specification 9
3. Summary Table 13
4. Capacity Table 14
5. Dimensional Drawing 16
6. Center of Gravity 18
7. Electrical Wiring Diagram 19
8. Sound Data 20
9. Temperature and air flow distribution 22

1. Line-up

Wind-Free 4Way Cassette

Indoor unit

Model	Capacity (kBtu/h)			
	18	24	30	36
Wind-Free 4Way				
	CNG184DD (AC018DN4DCG/AA)	CNG244DD (AC024DN4DCG/AA)	CNG304DD (AC030DN4DCG/AA)	CNG364DD (AC036DN4DCG/AA)

Outdoor Unit

Model	Capacity (kBtu/h)			
	18	24	30	36
Wind-Free 4Way				
	CXF18SCD (AC018DXSCCF/AA)	CXF24SCD (AC024DXSCCF/AA)	CXF30SCD (AC030DXSCCF/AA)	CXF36SCD (AC036DXSCCF/AA)

2. Specification

Wind-Free 4Way Cassette

Model Name		Indoor Unit			AC018DN4DCG/AA	AC024DN4DCG/AA
		Outdooru Unit			AC018DXSCCF/AA	AC024DXSCCF/AA
US Code		Indoor Unit			CNG184DD	CNG244DD
		Outdooru Unit			CXF18SCD	CXF24SCD
System	Mode			-	Cooling Only	Cooling Only
	Performance	Capacity	Cooling (Min/Std/Max)	kW	1.1 / 5.2 / 6.4	1.7 / 7.0 / 8.7
				Btu/h	4,000 / 18,000 / 22,000	6,000 / 24,000 / 30,000
				US RT	0.33 / 1.50 / 1.83	0.50 / 2.00 / 2.50
			Heating (Min/Std/Max)	kW	-	-
				Btu/h	-	-
				US RT	-	-
	Power	Power Input	Cooling (Min/Std/Max)	kW	0.24 / 1.44 / 2.20	0.30 / 1.96 / 3.69
			Heating (Min/Std/Max)		-	-
		Current Input	Cooling (Min/Std/Max)	A	1.3 / 6.4 / 9.7	1.6 / 8.7 / 16.3
			Heating (Min/Std/Max)		-	-
		Current	MCA	A	13.7	21.3
			MOP	A	15.0	25.0
	Efficiency	EER2	Cooling	-	3.66	3.58
			Cooling (US)	(Btu/h)/W	12.5	12.2
		COP	Heating	W/W	-	-
		SEER2 (Cooling Energy Grade)		-	23	22
		HSPF2 (Heating Energy Grade)		-	-	-
	Pipe Connections	Liquid Pipe		Type	Flare	Flare
				Φ, mm(inch)	6.35 (1/4)	6.35 (1/4)
		Gas Pipe		Type	Flare	Flare
				Φ, mm(inch)	12.7 (1/2)	15.88 (5/8)
		Heat Insulation		-	Both liquid and gas pipes	Both liquid and gas pipes
		Pipe Length (ODU-IDU)	Standard	m (ft)	7.5 (24.6)	7.5 (24.6)
			Max.	m (ft)	30 (98.4)	50 (164.0)
			Elevation	m (ft)	20 (65.6)	30 (98.4)
			Chargeless	m (ft)	7.5 (24.6)	7.5 (24.6)
	Wiring Connections	Communication	Min.	mm^2	0.75	0.75
				AWG	18	18
			Remark	-	F1,F2	F1,F2
	Refrigerant	Type		-	R32	R32
		Factory Charging		kg	1.3	1.7
				lbs	2.87	3.75
Indoor Unit	Power Supply			Φ,#,V,Hz	1,2,208-230,60	1,2,208-230,60
	Heat Exchanger	Type		-	Fin & Tube	Fin & Tube
		Material	Fin	-	Al	Al
			Tube	-	Cu	Cu
		Fin Treatment		-	Green Hydrophile	Green Hydrophile
	Fan	Type		-	Turbo	Turbo
		Quantity		EA	1	1
		Air Flow Rate	Cooling (H/M/L)	m^3/min	24 / 21 / 18	24 / 21 / 18
				ft^3/min	848 / 742 / 636	848 / 742 / 636
			Heating (H/M/L)	m^3/min	-	-
				ft^3/min	-	-
	Fan Motor	Type		-	BLDC	BLDC
		Output		W x n	65 x 1	65 x 1
	Drain	Drain Pipe		Φ, mm	OD26.67	OD26.67
	Sound Level	Sound Pressure Level	H/M/L	dB(A)	36 / 33 / 30	36 / 33 / 30
		Sound Power Level		dB(A)	53	53
	External Dimension	Net Weight		kg(lbs)	16.5 (36.4)	16.5 (36.4)
		Shipping Weight		kg(lbs)	20.0 (44.1)	20.0 (44.1)
		Net Dimensions (WxHxD)		mm	840 x 246 x 840	840 x 246 x 840
				inch	33.07 x 9.69 x 33.07	33.07 x 9.69 x 33.07
		Shipping Dimensions (WxHxD)		mm	898 x 316 x 898	898 x 316 x 898
				inch	35.35 x 12.44 x 35.35	35.35 x 12.44 x 35.35
	Casing	Material		-	Polypropylene	Polypropylene

2. Specification

Wind-Free 4Way Cassette

Model Name		Indoor Unit			AC018DN4DCG/AA	AC024DN4DCG/AA
		Outdooru Unit			AC018DXSCCF/AA	AC024DXSCCF/AA
US Code		Indoor Unit			CNG184DD	CNG244DD
		Outdooru Unit			CXF18SCD	CXF24SCD
Indoor Unit	Panel (1)	Model Name		-	PC4NUFMUNW	PC4NUFMUNW
		Type		-	Wind-Free Type	Wind-Free Type
		Material		-	HIPS	HIPS
		Color		-	DA White	DA White
		Net Weight		kg(lbs)	6.3 (13.9)	6.3 (13.9)
		Shipping Weight		kg(lbs)	8.4 (18.5)	8.4 (18.5)
		Net Dimensions (WxHxD)		mm	950 x 48 x 950	950 x 48 x 950
				inch	37.4 x 1.9 x 37.4	37.4 x 1.9 x 37.4
		Shipping Dimensions (WxHxD)		mm	1,010 x 117 x 1,000	1,010 x 117 x 1,000
				inch	39.8 x 4.6 x 39.4	39.8 x 4.6 x 39.4
	Panel (2)	Model Name		-	PC4NBFMUNW	PC4NBFMUNW
		Type		-	Wind-Free Type	Wind-Free Type
		Material		-	HIPS	HIPS
		Color		-	Black	Black
		Net Weight		kg(lbs)	6.3 (13.9)	6.3 (13.9)
		Shipping Weight		kg(lbs)	8.4 (18.5)	8.4 (18.5)
		Net Dimensions (WxHxD)		mm	950 x 48 x 950	950 x 48 x 950
				inch	37.4 x 1.9 x 37.4	37.4 x 1.9 x 37.4
		Shipping Dimensions (WxHxD)		mm	1,010 x 117 x 1,000	1,010 x 117 x 1,000
				inch	39.8 x 4.6 x 39.4	39.8 x 4.6 x 39.4
	Control System	Infrared remote control		-	AR-CH01U	AR-CH01U
		Wired remote control		-	MWR-WG01UN	MWR-WG01UN
	Drain Pump	Drain Pump		-	Included	Included
		Max.lifting Height / Displacement		in / gal/h	29.53 / 6.34	29.53 / 6.34
	Additional Accessories	Air Filter		-	Removable / Washable	Removable / Washable
Outdoor Unit	Power Supply			Φ,#,V,Hz	1, 2, 208-230, 60	1, 2, 208-230, 60
	Heat Exchanger	Type		-	Fin & Tube	Fin & Tube
		Material	Fin	-	Al	Al
			Tube	-	Cu	Cu
		Fin Treatment		-	Blue Hydrophile	Anti-Corrosion
	Compressor	Model		-	UB9TA8150FEQTS	UB9TA9180FEQSG
		Type		-	Twin Rotary	Twin Rotary
		Output		kW	1.41	1.68
		Oil	Type	-	POE	POE
			Initial Charge	cc (fl oz)	450	570
	Fan	Type		-	Propeller	Propellar
		Discharge direction		-	Side	Side
		Quantity		EA	1	1
		Air Flow Rate		m^3/min	50	61
				ft^3/min	1,766	2,154
	Fan Motor	Type		-	BLDC	BLDC
		Output		W x n	125 x 1	125 x 1
	Sound Level	Sound Pressure Level	Cooling	dB(A)	48	50
			Heating	dB(A)	-	-
		Sound Power Level		dB(A)	62	65
	External Dimension	Net Weight		kg(lbs)	40.0 (88.2)	46.0 (101.4)
		Shipping Weight		kg(lbs)	43.0 (94.8)	50.0 (110.2)
		Net Dimensions (WxHxD)		mm	880 x 638 x 310	880 x 798 x 310
				inch	34.65 x 25.12 x 12.20	34.65 x 31.42 x 12.20
		Shipping Dimensions (WxHxD)		mm	1,023 x 724 x 413	1,023 x 881 x 413
				inch	40.28 x 28.50 x 16.26	40.28 x 34.69 x 16.26
	Casing	Material	Body	-	Steel	Steel
	Operating Temp. Range	Cooling		℃ (℉)	-40~50 (-40~122)	-40~50 (-40~122)
		Heating		℃ (℉)	-	-

- Specification may be subject to change without prior notice.
  1) Performances are based on the following test conditions.
     - Cooling : Indoortemperature : 80°F(26.7°C) DB, 67°F(19.4°C) WB, Outdoortemperature : 95°F(35°C) DB, 75°F(23.9°C) WB
     - Heating : Indoortemperature : 70°F(21.1°C) DB, 60°F(15.6°C) WB, Outdoortemperature : 47°F(8.3°C) DB, 43°F(6.1°C) WB
     - Equivalent refrigerant piping length 5m(16.4ft), Level differences : 0m(0ft))
  2) Select wire size based on the value of MCA
  3) Sound pressure level is obtained in an anechoic room.
     - Sound pressure level is a relative value, depending on the distance and acoustic environment.
     - Sound pressure level may differ depending on operation condition.
     - dBA = A-weighted sound pressure level / Reference acoustic pressure 0 dB = 20uPa
  4) Sound power level is an absolute value that a sound source generates.
     - dBA = A-weighted sound power level / Reference power : 1pW / Measured according to ISO 3741
  5) These products contain R32 (GWP=675) which is fluorinated greenhouse gas.

2. Specification

Wind-Free 4Way Cassette

Model Name		Indoor Unit			AC030DN4DCG/AA	AC036DN4DCG/AA
		Outdooru Unit			AC030DXSCCF/AA	AC036DXSCCF/AA
US Code		Indoor Unit			CNG304DD	CNG364DD
		Outdooru Unit			CXF30SCD	CXF36SCD
System	Mode			-	Cooling Only	Cooling Only
	Performance	Capacity	Cooling (Min/Std/Max)	kW	2.9 / 8.7 / 11.1	3.8 / 10.5 / 12.8
				Btu/h	10,000 / 30,000 / 38,000	13,000 / 36,000 / 44,000
				US RT	0.83 / 2.50 / 3.17	1.08 / 3.00 / 3.67
			Heating (Min/Std/Max)	kW	-	-
				Btu/h	-	-
				US RT	-	-
	Power	Power Input	Cooling (Min/Std/Max)	kW	0.61 / 2.50 / 4.60	0.78 / 3.49 / 4.85
			Heating (Min/Std/Max)		-	-
		Current Input	Cooling (Min/Std/Max)	A	3.2 / 11.2 / 20.3	4.0 / 15.6 / 21.3
			Heating (Min/Std/Max)		-	-
		Current	MCA	A	27.0	27.0
			MOP	A	30.0	30.0
	Efficiency	EER2	Cooling	-	3.52	3.02
			Cooling (US)	(Btu/h)/W	12	10.3
		COP	Heating	W/W	-	-
		SEER2 (Cooling Energy Grade)		-	21.7	19.7
		HSPF2 (Heating Energy Grade)		-	-	-
	Pipe Connections	Liquid Pipe		Type	Flare	Flare
				Φ, mm(inch)	9.52 (3/8)	9.52 (3/8)
		Gas Pipe		Type	Flare	Flare
				Φ, mm(inch)	15.88 (5/8)	15.88 (5/8)
		Heat Insulation		-	Both liquid and gas pipes	Both liquid and gas pipes
		Pipe Length (ODU-IDU)	Standard	m (ft)	7.5 (24.6)	7.5 (24.6)
			Max.	m (ft)	50 (164.0)	50 (164.0)
			Elevation	m (ft)	30 (98.4)	30 (98.4)
			Chargeless	m (ft)	7.5 (24.6)	7.5 (24.6)
	Wiring Connections	Communication	Min.	mm^2	0.75	0.75
				AWG	18	18
			Remark	-	F1,F2	F1,F2
	Refrigerant	Type		-	R32	R32
		Factory Charging		kg	2.7	2.7
				lbs	5.95	5.95
Indoor Unit	Power Supply			Φ,#,V,Hz	1,2,208-230,60	1,2,208-230,60
	Heat Exchanger	Type		-	Fin & Tube	Fin & Tube
		Material	Fin	-	Al	Al
			Tube	-	Cu	Cu
		Fin Treatment		-	Green Hydrophile	Green Hydrophile
	Fan	Type		-	Turbo (3D)	Turbo (3D)
		Quantity		EA	1	1
		Air Flow Rate	Cooling (H/M/L)	m^3/min	30.7 / 24.8 / 19.0	34.2 / 25.8 / 19.0
				ft^3/min	1,084 / 876 / 671	1,208 / 911 / 671
			Heating (H/M/L)	m^3/min	-	-
				ft^3/min	-	-
	Fan Motor	Type		-	BLDC	BLDC
		Output		W x n	97 x 1	97 x 1
	Drain	Drain Pipe		Φ, mm	OD26.67	OD26.67
	Sound Level	Sound Pressure Level	H/M/L	dB(A)	39 / 35 / 31	43 / 38 / 32
		Sound Power Level		dB(A)	55	59
	External Dimension	Net Weight		kg(lbs)	22.0 (48.5)	22.0 (48.5)
		Shipping Weight		kg(lbs)	25.5 (56.2)	25.5 (56.2)
		Net Dimensions (WxHxD)		mm	840 x 288 x 840	840 x 288 x 840
				inch	33.07 x 11.39 x 33.07	33.07 x 11.39 x 33.07
		Shipping Dimensions (WxHxD)		mm	898 x 357 x 898	898 x 357 x 898
				inch	35.35 x 14.06 x 35.35	35.35 x 14.06 x 35.35
	Casing	Material		-	Polypropylene	Polypropylene

2. Specification

Wind-Free 4Way Cassette

Model Name		Indoor Unit			AC030DN4DCG/AA	AC036DN4DCG/AA
		Outdooru Unit			AC030DXSCCF/AA	AC036DXSCCF/AA
US Code		Indoor Unit			CNG304DD	CNG364DD
		Outdooru Unit			CXF30SCD	CXF36SCD
Indoor Unit	Panel (1)	Model Name		-	PC4NUFMUNW	PC4NUFMUNW
		Type		-	Wind-Free Type	Wind-Free Type
		Material		-	HIPS	HIPS
		Color		-	DA White	DA White
		Net Weight		kg(lbs)	6.3 (13.9)	6.3 (13.9)
		Shipping Weight		kg(lbs)	8.4 (18.5)	8.4 (18.5)
		Net Dimensions (WxHxD)		mm	950 x 48 x 950	950 x 48 x 950
				inch	37.4 x 1.9 x 37.4	37.4 x 1.9 x 37.4
		Shipping Dimensions (WxHxD)		mm	1,010 x 117 x 1,000	1,010 x 117 x 1,000
				inch	39.8 x 4.6 x 39.4	39.8 x 4.6 x 39.4
	Panel (2)	Model Name		-	PC4NBFMUNW	PC4NBFMUNW
		Type		-	Wind-Free Type	Wind-Free Type
		Material		-	HIPS	HIPS
		Color		-	Black	Black
		Net Weight		kg(lbs)	6.3 (13.9)	6.3 (13.9)
		Shipping Weight		kg(lbs)	8.4 (18.5)	8.4 (18.5)
		Net Dimensions (WxHxD)		mm	950 x 48 x 950	950 x 48 x 950
				inch	37.4 x 1.9 x 37.4	37.4 x 1.9 x 37.4
		Shipping Dimensions (WxHxD)		mm	1,010 x 117 x 1,000	1,010 x 117 x 1,000
				inch	39.8 x 4.6 x 39.4	39.8 x 4.6 x 39.4
	Control System	Infrared remote control		-	AR-CH01U	AR-CH01U
		Wired remote control		-	MWR-WG01UN	MWR-WG01UN
	Drain Pump	Drain Pump		-	Included	Included
		Max.lifting Height / Displacement		in / gal/h	29.53 / 6.34	29.53 / 6.34
	Additional Accessories	Air Filter		-	Removable / Washable	Removable / Washable
Outdoor Unit	Power Supply			Φ,#,V,Hz	1, 2, 208-230, 60	1, 2, 208-230, 60
	Heat Exchanger	Type		-	Fin & Tube	Fin & Tube
		Material	Fin	-	Al	Al
			Tube	-	Cu	Cu
		Fin Treatment		-	Anti-Corrosion	Anti-Corrosion
	Compressor	Model		-	UB8TN8300FJUSG	UB8TN8300FJUSG
		Type		-	Twin Rotary	Twin Rotary
		Output		kW	2.91	2.91
		Oil	Type	-	POE	POE
			Initial Charge	cc (fl oz)	1,200	1,200
	Fan	Type		-	Propellar	Propeller
		Discharge direction		-	Side	Side
		Quantity		EA	1	1
		Air Flow Rate		m^3/min	76	76
				ft^3/min	2,684	2,684
	Fan Motor	Type		-	BLDC	BLDC
		Output		W x n	125 x 1	125 x 1
	Sound Level	Sound Pressure Level	Cooling	dB(A)	52	54
			Heating	dB(A)	-	-
		Sound Power Level		dB(A)	67	69
	External Dimension	Net Weight		kg(lbs)	71.0 (156.5)	71.0 (156.5)
		Shipping Weight		kg(lbs)	76.0 (167.6)	76.0 (167.6)
		Net Dimensions (WxHxD)		mm	940 x 998 x 330	940 x 998 x 330
				inch	37.01 x 39.29 x 12.99	37.01 x 39.29 x 12.99
		Shipping Dimensions (WxHxD)		mm	995 x 1,096 x 426	995 x 1,096 x 426
				inch	39.17 x 43.15 x 16.77	39.17 x 43.15 x 16.77
	Casing	Material	Body	-	Steel	Steel
	Operating Temp. Range	Cooling		°C (°F)	-40~50 (-40~122)	-40~50 (-40~122)
		Heating		°C (°F)	-	-

- Specification may be subject to change without prior notice.
  1) Performances are based on the following test conditions.
     - Cooling : Indoortemperature : 80°F(26.7°C) DB, 67°F(19.4°C) WB, Outdoortemperature : 95°F(35°C) DB, 75°F(23.9°C) WB
     - Heating : Indoortemper e : 70°F(21.1°C) DB, 60°F(15.6°C) WB, Outdoortemperature : 47°F(8.3°C) DB, 43°F(6.1°C) WB
     - Equivalent refrigerant piping length 5m(16.4ft), Level differences : 0m(0ft))
  2) Select wire size based on the value of MCA
  3) Sound pressure level is obtained in an anechoic room.
     - Sound pressure level is a relative value, depending on the distance and acoustic environment.
     - Sound pressure level may differ depending on operation condition.
     - dBA = A-weighted sound pressure level / Reference acoustic pressure 0 dB = 20uPa
  4) Sound power level is an absolute value that a sound source generates.
     - dBA = A-weighted sound power level / Reference power : 1pW / Measured according to ISO 3741
  5) These products contain R32 (GWP=675) which is fluorinated greenhouse gas.

3. Summary Table

Wind-Free 4Way Cassette

Performance Characteristics

Model Code	Net Weight (lbs)		Capacity		Fan Speed	Air Flow Rate		Sound Pressure Level (dBA)	Sound Power Level (dBA)
			Cooling (Btu/h)	Heating (Btu/h)		Cooling (CFM)	Heating (CFM)		
CNG184DD (AC018DN4DCG/AA)	36.4	Max.	22,000	-	High	848	-	36	53
		Std.	18,000	-	Mid	742	-	33	-
		Min.	4,000	-	Low	636	-	30	-
CNG244DD (AC024DN4DCG/AA)	36.4	Max.	30,000	-	High	848	-	36	53
		Std.	24,000	-	Mid	742	-	33	-
		Min.	6,000	-	Low	636	-	30	-
CNG304DD (AC030DN4DCG/AA)	48.5	Max.	38,000	-	High	1,084	-	39	55
		Std.	30,000	-	Mid	876	-	35	-
		Min.	10,000	-	Low	671	-	31	-
CNG364DD (AC036DN4DCG/AA)	48.5	Max.	44,000	-	High	1,208	-	43	59
		Std.	36,000	-	Mid	911	-	38	-
		Min.	13,000	-	Low	671	-	32	-

NOTE

- Sound data is based on cooling operation.

Electric Characteristics

Model		Outdoor Unit				Input Current (Amperes)				Power Supply	
Indoor Unit	Outdoor Unit	Rated	Voltage range			Outdoor Unit		Indoor Unit	Total	MCA(A)	MOP(A)
		Hz	Volts	Min.	Max	Cooling	Heating				
CNG184DD (AC018DN4DCG/AA)	CXF18SCD (AC018DXSCCF/AA)	60	208 to 230	187	253	11.58	-	0.79	12.37	13.7	15
CNG244DD (AC024DN4DCG/AA)	CXF24SCD (AC024DXSCCF/AA)	60	208 to 230	187	253	19.20	-	0.79	19.99	21.3	25
CNG304DD (AC030DN4DCG/AA)	CXF30SCD (AC030DXSCCF/AA)	60	208 to 230	187	253	23.45	-	0.79	24.24	27.0	30
CNG364DD (AC036DN4DCG/AA)	CXF36SCD (AC036DXSCCF/AA)	60	208 to 230	187	253	23.45	-	0.79	24.24	27.0	30

NOTE

- MCA : Minimum circuit amperes
- MOP: Maximum Overcurrent Protective Device
- Select wire size based on the value of MCA

4. Capacity Table

Wind-Free 4Way Cassette

(1) CNG184DD(AC018DN4DCG/AA)+CXF18SCD (AC018DXSCCF/AA)

Cooling

TC : Total Capacity, SHC : Sensible Heat Capacity, PI : Power Input

Outdoor Temperature (°F, DB)	Indoor Temperature (°F, DB / WB)																				
	68 / 57			72 / 61			77 / 64			80 / 67			82 / 70			86 / 72			90 / 75		
	TC	SHC	PI	TC	SHC	PI	TC	SHC	PI	TC	SHC	PI	TC	SHC	PI	TC	SHC	PI	TC	SHC	PI
	MBH	MBH	kW	MBH	MBH	kW	MBH	MBH	kW	MBH	MBH	kW	MBH	MBH	kW	MBH	MBH	kW	MBH	MBH	kW
-40	12.7	9.2	0.54	13.4	9.5	0.55	14.0	9.8	0.56	14.4	10.1	0.58	14.7	10.0	0.58	15.4	9.9	0.59	16.2	9.7	0.61
0	19.9	14.4	1.17	21.0	14.8	1.19	21.8	15.3	1.21	22.5	15.8	1.24	23.0	15.6	1.25	24.1	15.4	1.28	25.3	15.1	1.30
70	21.5	15.5	1.33	22.6	16.0	1.36	23.6	16.5	1.38	24.3	17.0	1.41	24.8	16.8	1.43	26.0	16.7	1.45	27.3	16.3	1.48
95	15.9	11.1	1.36	16.8	11.4	1.38	17.5	11.8	1.41	18.0	12.1	1.44	18.4	12.0	1.45	19.3	11.9	1.48	20.2	11.7	1.51
115	16.7	13.1	1.99	17.6	13.5	2.03	18.3	13.9	2.07	18.9	14.4	2.12	19.3	14.2	2.14	20.2	14.1	2.18	21.3	13.8	2.22
122	11.9	10.3	1.56	12.6	10.7	1.59	13.1	11.0	1.62	13.5	11.3	1.66	13.8	11.2	1.67	14.5	11.1	1.71	15.2	10.9	1.74

(2) CNG244DD(AC024DN4DCG/AA)+CXF24SCD (AC024DXSCCF/AA)

Cooling

TC : Total Capacity, SHC : Sensible Heat Capacity, PI : Power Input

Outdoor Temperature (°F, DB)	Indoor Temperature (°F, DB / WB)																				
	68 / 57			72 / 61			77 / 64			80 / 67			82 / 70			86 / 72			90 / 75		
	TC	SHC	PI	TC	SHC	PI	TC	SHC	PI	TC	SHC	PI	TC	SHC	PI	TC	SHC	PI	TC	SHC	PI
	MBH	MBH	kW	MBH	MBH	kW	MBH	MBH	kW	MBH	MBH	kW	MBH	MBH	kW	MBH	MBH	kW	MBH	MBH	kW
-40	17.0	11.6	0.74	17.9	11.9	0.75	18.6	12.3	0.77	19.2	12.7	0.78	19.6	12.5	0.79	20.6	12.4	0.81	21.6	12.2	0.82
0	23.4	15.9	1.31	24.6	16.4	1.34	25.6	16.9	1.36	26.4	17.4	1.39	26.9	17.2	1.41	28.3	17.1	1.43	29.7	16.7	1.46
70	28.7	20.1	1.77	30.2	20.7	1.81	31.4	21.4	1.84	32.4	22.0	1.88	33.0	21.8	1.90	34.7	21.6	1.94	36.4	21.2	1.98
95	21.2	15.6	1.84	22.3	16.0	1.88	23.3	16.5	1.92	24.0	17.0	1.96	24.5	16.9	1.98	25.7	16.7	2.02	27.0	16.4	2.06
115	20.2	15.0	2.49	21.2	15.4	2.54	22.1	15.9	2.59	22.8	16.4	2.65	23.3	16.3	2.67	24.4	16.1	2.73	25.6	15.8	2.78
122	18.0	13.6	2.40	19.0	14.0	2.45	19.8	14.4	2.50	20.4	14.9	2.55	20.8	14.7	2.57	21.8	14.6	2.62	22.9	14.3	2.68

NOTE

- The performance table shows the average value of each conditions.

4. Capacity Table

Wind-Free 4Way Cassette

(3) CNG304DD(AC030DN4DCG/AA)+CXF30SCD (AC030DXSCCF/AA)

Cooling

TC : Total Capacity, SHC : Sensible Heat Capacity, PI : Power Input

Outdoor Temperature (°F, DB)	Indoor Temperature (°F, DB / WB)																				
	68 / 57			72 / 61			77 / 64			80 / 67			82 / 70			86 / 72			90 / 75		
	TC	SHC	PI	TC	SHC	PI	TC	SHC	PI	TC	SHC	PI	TC	SHC	PI	TC	SHC	PI	TC	SHC	PI
	MBH	MBH	kW	MBH	MBH	kW	MBH	MBH	kW	MBH	MBH	kW	MBH	MBH	kW	MBH	MBH	kW	MBH	MBH	kW
-40	21.2	15.3	1.41	22.3	15.8	1.44	23.3	16.3	1.47	24.0	16.8	1.50	24.5	16.6	1.52	25.7	16.5	1.55	27.0	16.1	1.58
0	31.8	23.0	2.02	33.5	23.7	2.06	34.9	24.4	2.11	36.0	25.2	2.15	36.7	24.9	2.17	38.6	24.7	2.21	40.5	24.2	2.26
70	33.2	24.0	2.07	34.9	24.7	2.11	36.4	25.5	2.16	37.5	26.3	2.20	38.3	26.0	2.22	40.2	25.7	2.27	42.2	25.2	2.31
95	26.5	18.5	2.35	27.9	19.0	2.40	29.1	19.6	2.45	30.0	20.2	2.50	30.6	20.0	2.53	32.1	19.8	2.58	33.7	19.4	2.63
115	22.6	17.7	2.71	23.7	18.2	2.76	24.7	18.8	2.82	25.5	19.4	2.88	26.0	19.2	2.90	27.3	19.0	2.96	28.7	18.6	3.02
122	19.9	17.2	2.49	21.0	17.8	2.55	21.8	18.3	2.60	22.5	18.9	2.65	23.0	18.7	2.68	24.1	18.5	2.73	25.3	18.2	2.78

(4) CNG364DD(AC036DN4DCG/AA)+CXF36SCD (AC036DXSCCF/AA)

Cooling

TC : Total Capacity, SHC : Sensible Heat Capacity, PI : Power Input

Outdoor Temperature (°F, DB)	Indoor Temperature (°F, DB / WB)																				
	68 / 57			72 / 61			77 / 64			80 / 67			82 / 70			86 / 72			90 / 75		
	TC	SHC	PI	TC	SHC	PI	TC	SHC	PI	TC	SHC	PI	TC	SHC	PI	TC	SHC	PI	TC	SHC	PI
	MBH	MBH	kW	MBH	MBH	kW	MBH	MBH	kW	MBH	MBH	kW	MBH	MBH	kW	MBH	MBH	kW	MBH	MBH	kW
-40	25.5	20.8	1.97	26.8	21.4	2.01	27.9	22.1	2.05	28.8	22.8	2.09	29.4	22.5	2.11	30.8	22.3	2.16	32.4	21.9	2.20
0	38.2	26.0	3.05	40.2	26.8	3.12	41.9	27.7	3.18	43.2	28.5	3.25	44.1	28.2	3.28	46.3	27.9	3.34	48.6	27.4	3.41
70	39.8	25.5	3.12	41.9	26.3	3.18	43.7	27.1	3.25	45.0	27.9	3.32	45.9	27.6	3.35	48.2	27.3	3.42	50.6	26.8	3.48
95	31.8	21.7	3.28	33.5	22.4	3.35	34.9	23.0	3.42	36.0	23.8	3.49	36.7	23.5	3.52	38.6	23.3	3.60	40.5	22.8	3.67
115	27.1	19.0	3.61	28.5	19.6	3.69	29.7	20.2	3.76	30.6	20.8	3.84	31.2	20.6	3.88	32.8	20.4	3.95	34.4	20.0	4.03
122	23.9	18.2	3.22	25.1	18.8	3.28	26.2	19.4	3.35	27.0	20.0	3.42	27.5	19.8	3.45	28.9	19.6	3.52	30.4	19.2	3.59

NOTE

- The performance table shows the average value of each conditions.

5. Dimensional Drawing

Wind-Free 4Way Cassette

CNG184DD (AC018DN4DCG/AA), CNG244DD (AC024DN4DCG/AA)

Units : mm [inches]

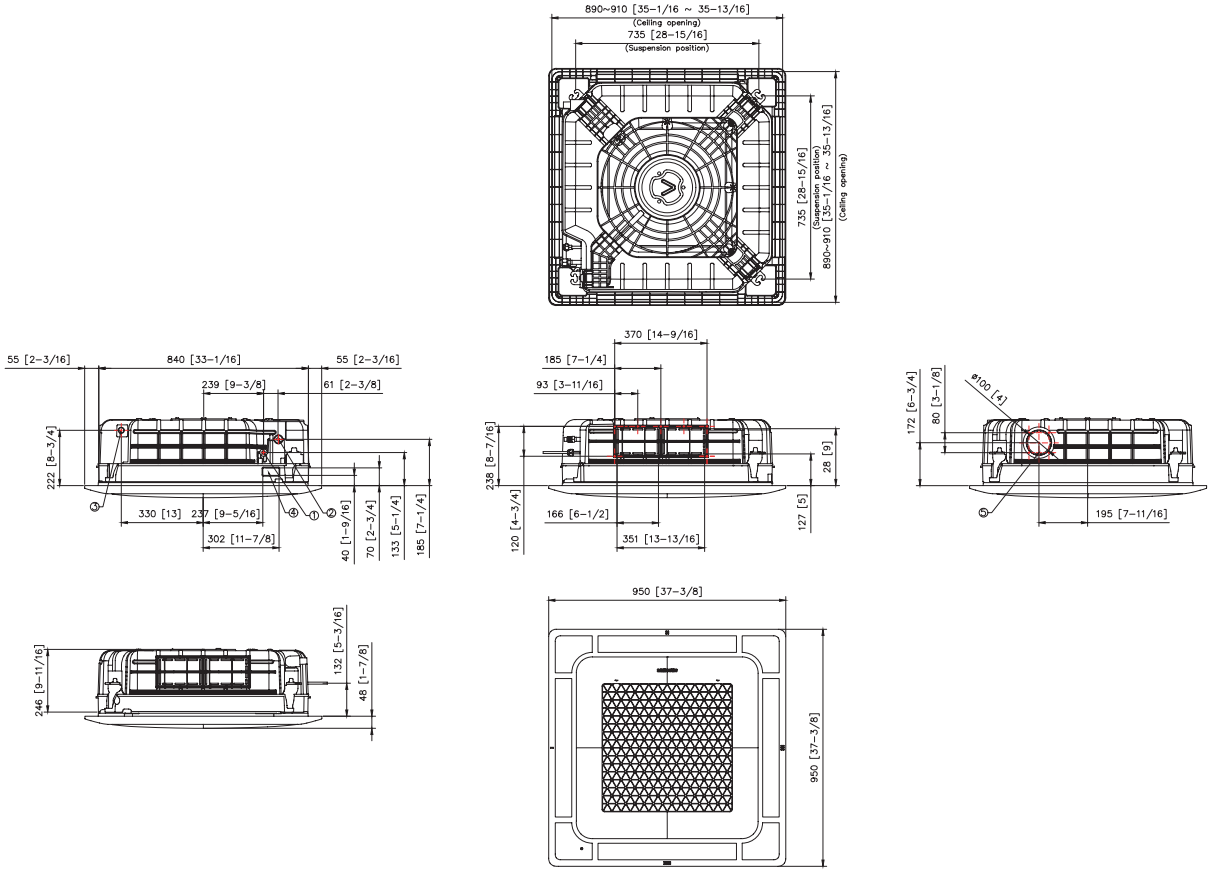

No.	Name	Description	
		CNG184DD (AC018DN4DCG/AA)	CNG244DD (AC024DN4DCG/AA)
1	Liquid pipe connection	Φ6.35(1/4)	
2	Gas pipe connection	Φ12.7 (1/2)	Φ15.88(5/8)
3	Drain pipe connection	OD26.67	
4	Power supply & Communication wiring conduit		
5	Fresh air intake	Φ10[4] , Use M4 Screw	

NOTE

- As for suspension bolt, please use M8 ~ M10.
  (Procured at local site)

5. Dimensional Drawing

Wind-Free 4Way Cassette

CNG304DD (AC030DN4DCG/AA), CNG364DD (AC036DN4DCG/AA)

Units : mm [inches]

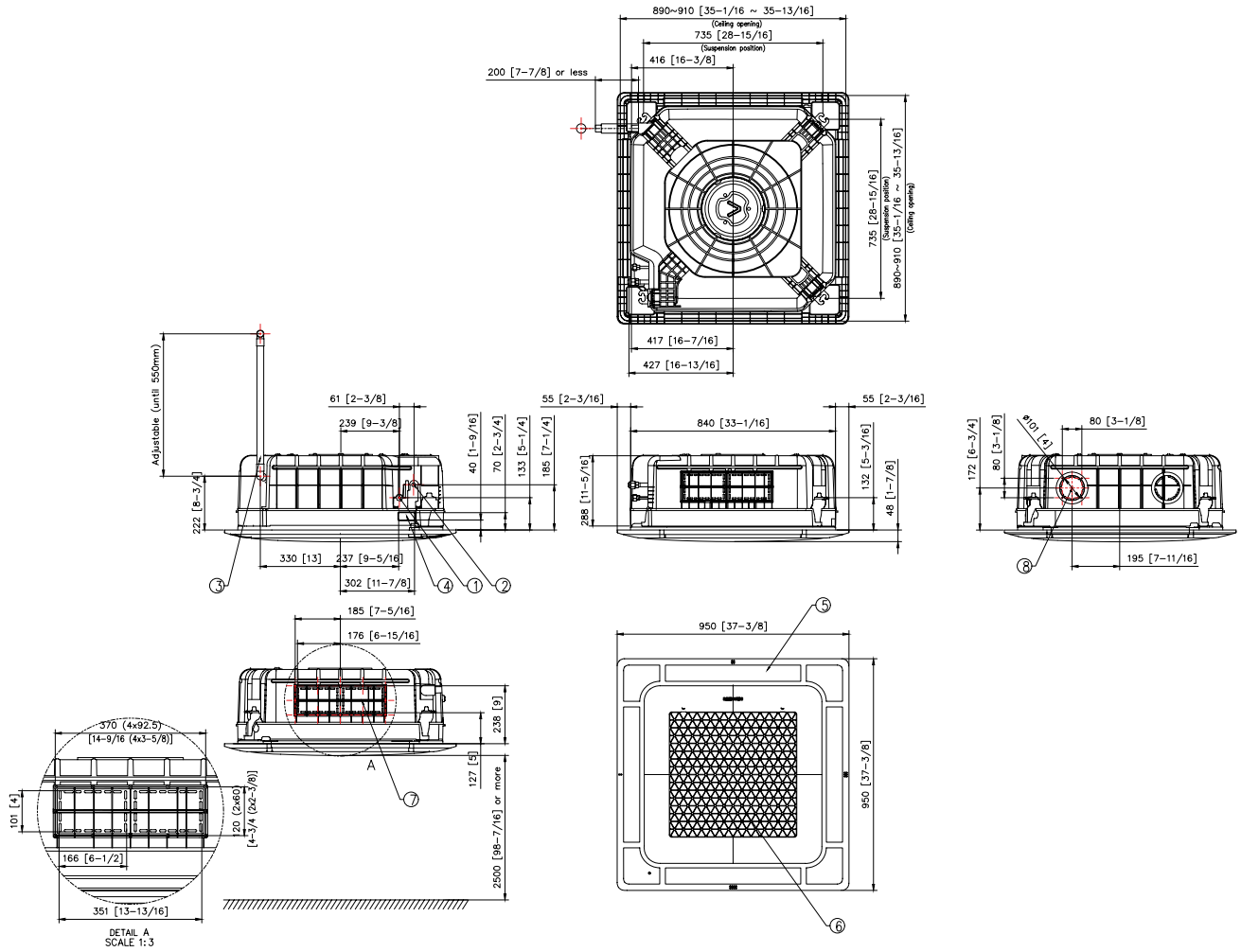

No.	Name	Description
1	Liquid pipe connection	Φ9.52(3/8)
2	Gas pipe connection	Φ15.88(5/8)
3	Drain pipe connection	OD26.67
4	Power supply & Communication wiring conduit	
5	Air Outlet Louver	
6	Air Inlet Grille	
7	Sub - duct	* The sub duct is not applicabel to the Wind-free panel
8	Fresh air intake	Φ10[4] , Use M4 Screw

NOTE

- As for suspension bolt, please use M8 ~ M10.
  (Procured at local site)

6. Center of Gravity

Wind-Free 4Way Cassette

Units : mm [inches]

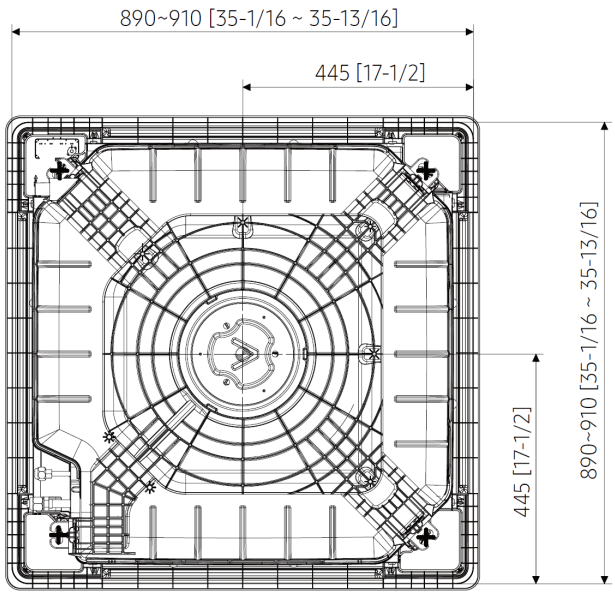

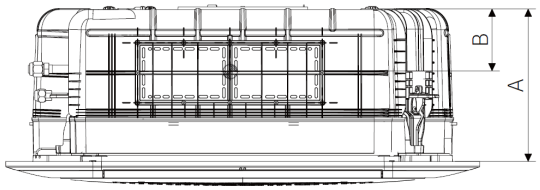

Model Name	A	B
CNG184DD (AC018DN4DCG/AA) **CNG244DD (AC024DN4DCG/AA)**	265 [10-7/16]	114 [4-1/2]
CNG304DD (AC030DN4DCG/AA) **CNG364DD (AC036DN4DCG/AA)**	305 [12]	130 [5-1/8]

7. Electrical Wiring Diagram

Wind-Free 4Way Cassette

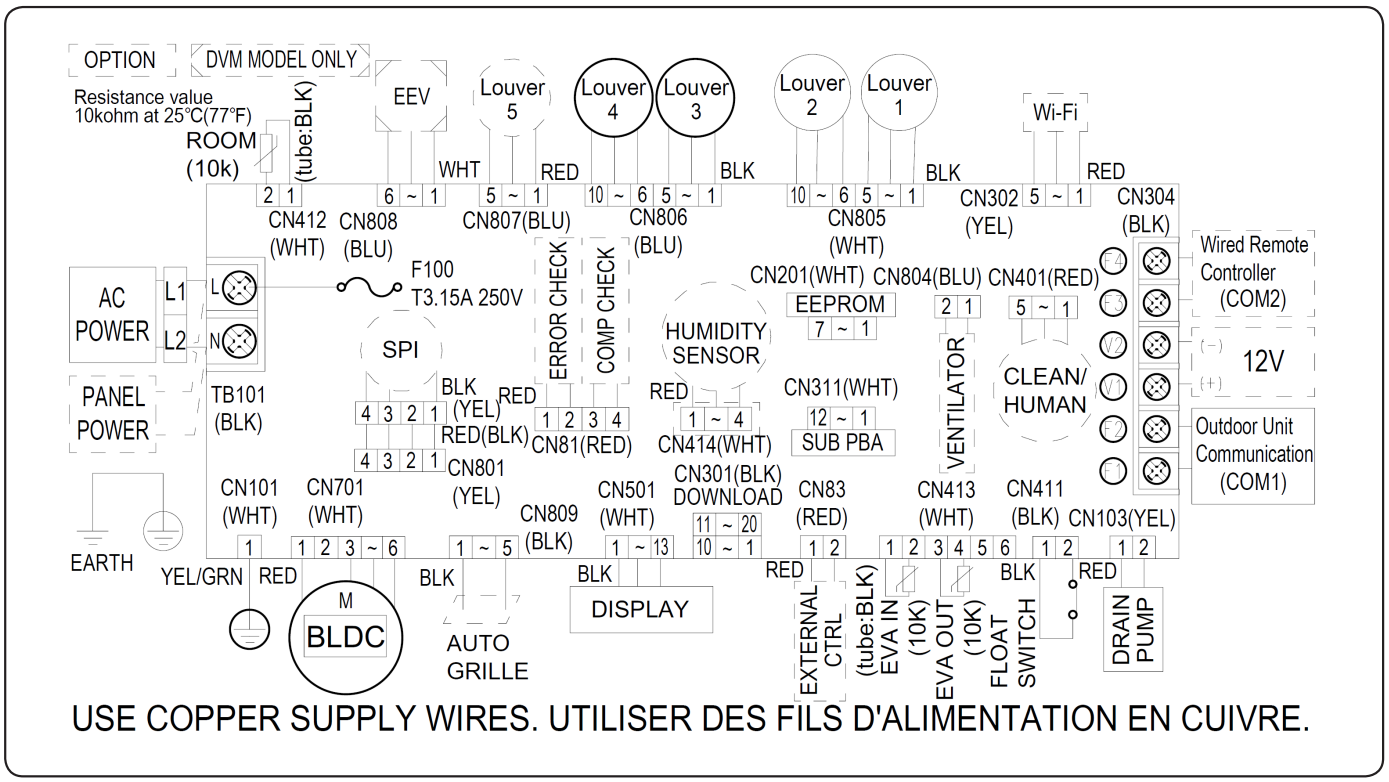

SUB PBA	SUB PBA for wired remote control communication	ROOM(10K)	Thermistor - Indoor Room	EEV	Electronic Expansion Valve
COMP CHECK	Contact output port for compressor operation check	EVA IN(10K)	Thermistor - IDU heat exchanger In	F100	Fuse
M-BLDC	Motor for Indoor Fan	EVA OUT(10K)	Thermistor - IDU heat exchanger Out	EEPROM	EEPROM SUB PBA
DISPLAY	Panel LED display	EXTERNAL CTRL	Input port for external contact control	SPI	S-Plasma ion
ERROR CHECK	Contact output port for error check	VENTILATOR	Contact output port for Ventilator control		

NOTE

- This wiring diagram applies only to the Indoor unit.
- Symbols show as follow :
  blk: black, red: red, blu: blue, wht: white, yel: yellow, brn: brown, sky: skyblue: grn: green
- For connection wiring indoor-outdoor transmission F1-F2, indoor-wired remote controller transmission F3-F4.
- ⏚ Protective earth(screw), ▭▭▭ : connector, N : The wire quantity

8. Sound Data

Wind-Free 4Way Cassette

Sound Pressure level

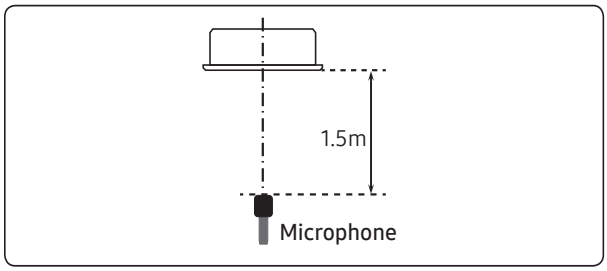

Unit: dB(A)

Model	High	Mid	Low
CNG184DD (AC018DN4DCG/AA)	36	33	30
CNG244DD (AC024DN4DCG/AA)	36	33	30
CNG304DD (AC030DN4DCG/AA)	39	35	31
CNG364DD (AC036DN4DCG/AA)	43	38	32

- NC Curve

1) CNG184DD (AC018DN4DCG/AA)

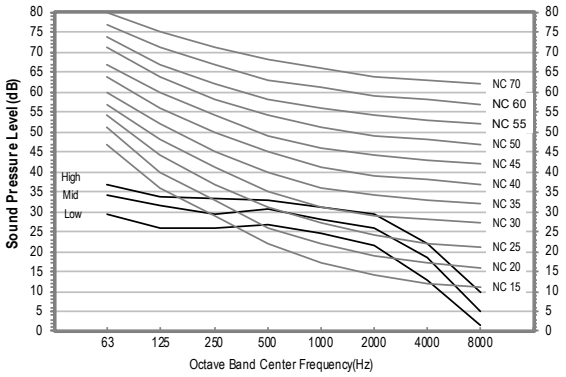

2) CNG244DD (AC024DN4DCG/AA)

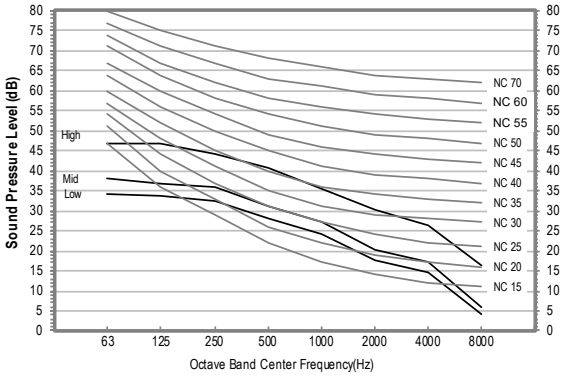

3) CNG304DD (AC030DN4DCG/AA)

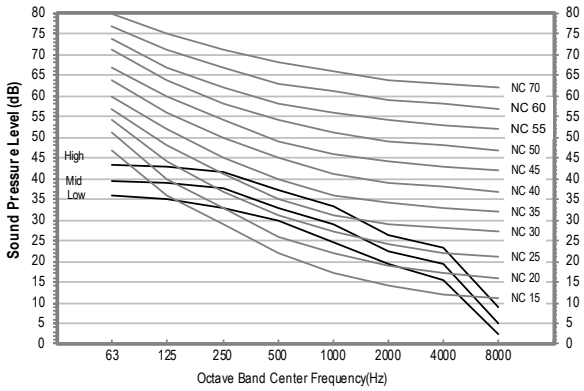

4) CNG364DD (AC036DN4DCG/AA)

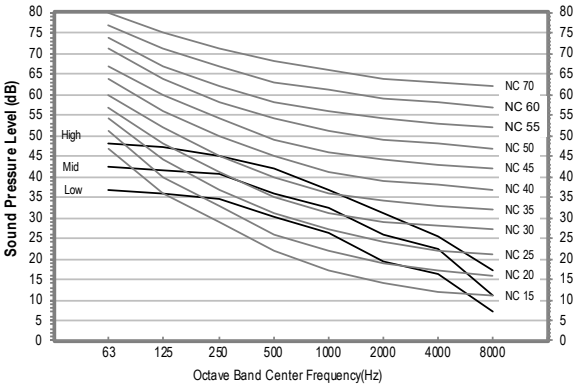

NOTE

- Specifications may be subject to change without prior notice.
  - Sound pressure level is obtained in an anechoic room.
  - Sound pressure level is a relative value, depending on the distance and acoustic environment.
  - Sound pressure level may differ depending on operation condition.
  - dBA = A weighted sound pressure level
  - Reference acoustic pressure 0 dB = 20μPa

8. Sound Data

Wind-Free 4Way Cassette

Sound Power level

NOTE

- Specifications may be subject to change without prior notice
  - Sound power level is an absolute value that a sound source generates.
  - dBA = A-weighted sound power level.
  - Reference power : 1pW.
  - Measured according to ISO 3741.

Unit: dB(A)

Model	Cooling
CNG184DD (AC018DN4DCG/AA)	53
CNG244DD (AC024DN4DCG/AA)	53
CNG304DD (AC030DN4DCG/AA)	55
CNG364DD (AC036DN4DCG/AA)	59

- NC Curve

1) CNG184DD (AC018DN4DCG/AA)

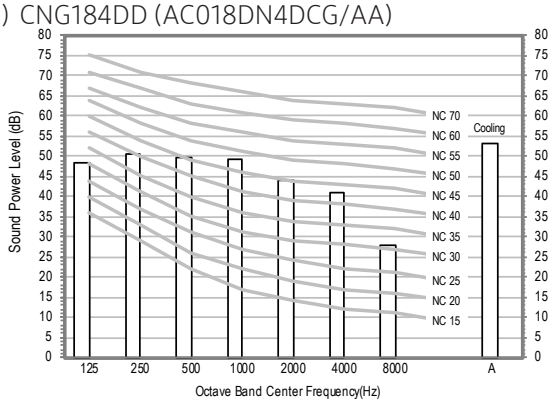

2) CNG244DD (AC024DN4DCG/AA)

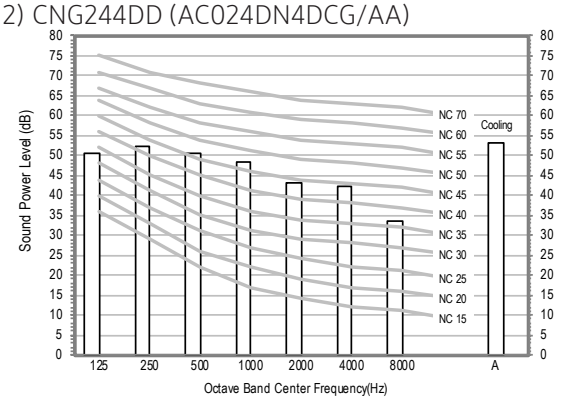

3) CNG304DD (AC030DN4DCG/AA)

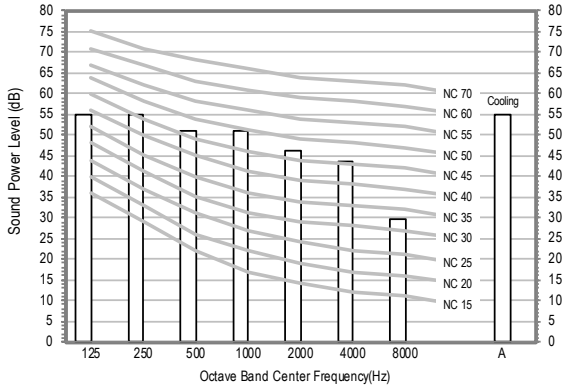

4) CNG364DD (AC036DN4DCG/AA)

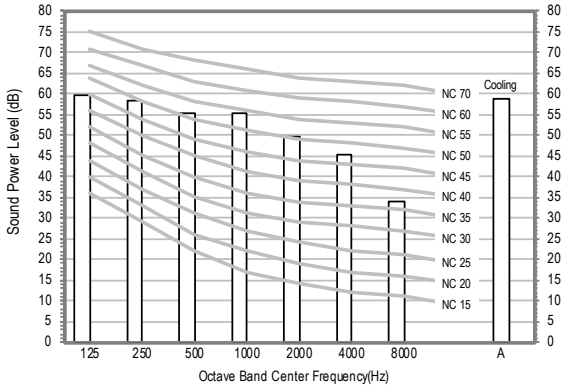

9. Temperature and air flow distribution

Wind-Free 4Way Cassette

CNG184DD (AC018DN4DCG/AA) + CXF18SCD (AC018DXSCCF/AA)

- Cooling Air Velocity distribution
  (Discharge angle : 45 degree)

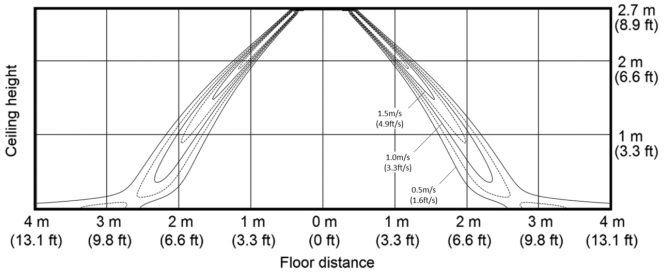

- Cooling temperature distribution
  (Discharge angle : 45 degree)

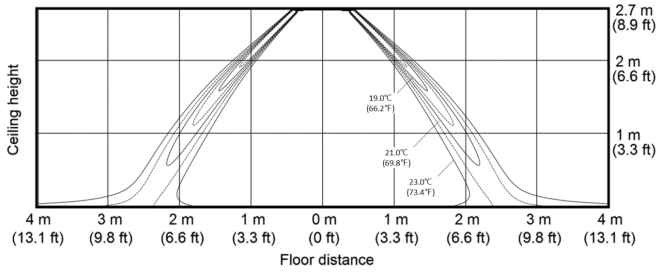

CNG244DD (AC024DN4DCG/AA) + CXF24SCD (AC024DXSCCF/AA)

- Cooling Air Velocity distribution
  (Discharge angle : 45 degree)

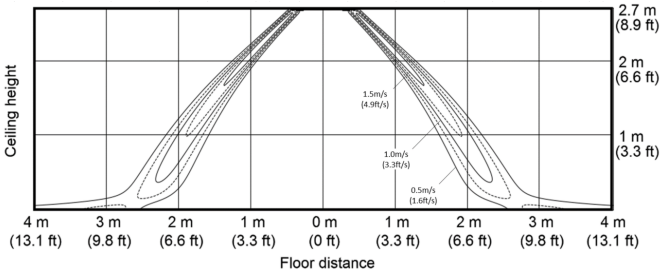

- Cooling temperature distribution
  (Discharge angle : 45 degree)

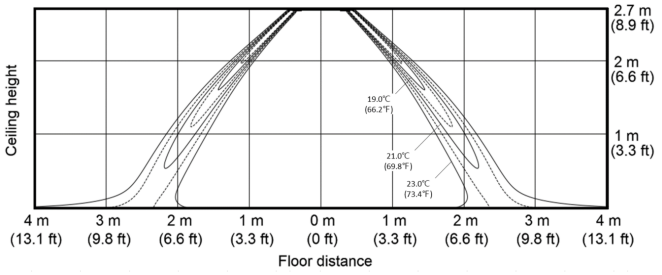

CNG304DD (AC030DN4DCG/AA) + CXF30SCD (AC030DXSCCF/AA)

- Cooling Air Velocity distribution
  (Discharge angle : 45 degree)

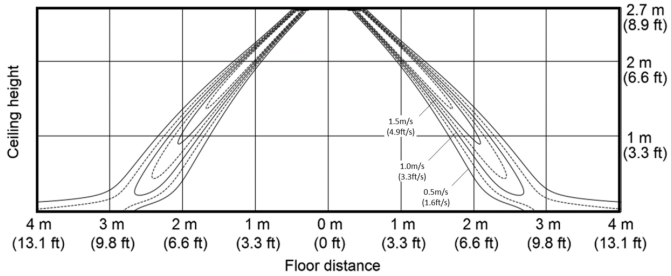

- Cooling temperature distribution
  (Discharge angle : 45 degree)

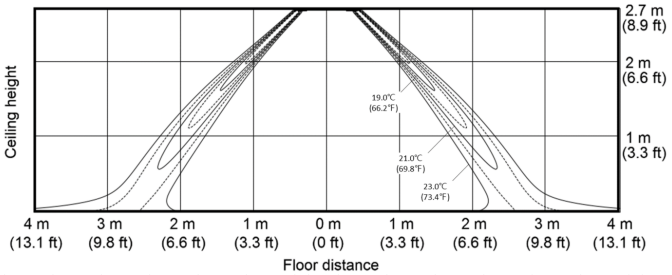

CNG364DD (AC036DN4DCG/AA) + CXF36SCD (AC036DXSCCF/AA)

- Cooling Air Velocity distribution
  (Discharge angle : 45 degree)

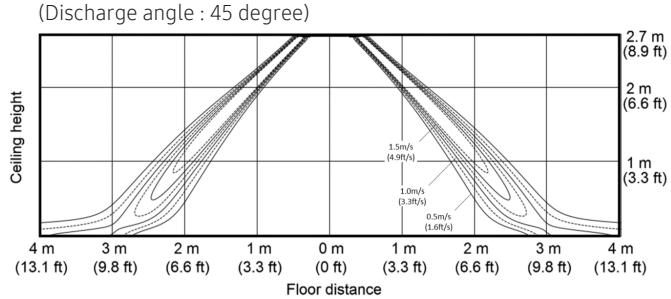

- Cooling temperature distribution
  (Discharge angle : 45 degree)

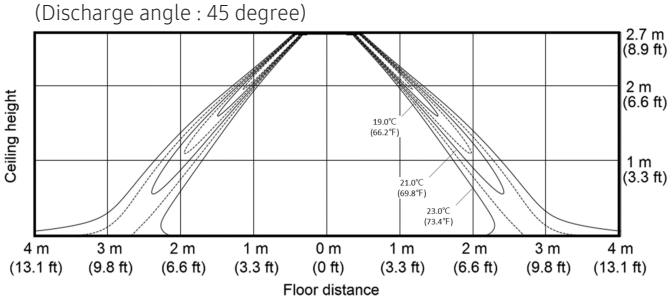

Outdoor Units

1. Summary Table	24
2. Dimensional Drawing	25
3. Center of Gravity	28
4. Electrical Wiring Diagram	30
5. Sound Data	32
6. Capacity Correction	34
7. Operation Range	35
8. Piping Diagram	36

1. Summary Table

Outdoor Units

Performance Characteristics

Capacity (Btu/h)	Model Code	Net Size (WxHxD inch)	Net Weight (lbs)	Airflow (CFM)	Sound Pressure Level (dBA)		Sound Power Level (dBA)
					Cooling	Heating	
18,000	CXF18SCD (AC018DXSCCF/AA)	34.65 x 25.12 x 12.20	88.2	1,766	48	-	62
24,000	CXF24SCD (AC024DXSCCF/AA)	34.65 x 31.42 x 12.20	101.4	2,154	50	-	65
30,000	CXF30SCD (AC030DXSCCF/AA)	37.01 x 39.29 x 12.99	156.5	2,684	52	-	67
36,000	CXF36SCD (AC036DXSCCF/AA)	37.01 x 39.29 x 12.99	156.5	2,684	54	-	69

NOTE

- Sound power level is based on cooling operation.

2. Dimensional Drawing

Outdoor Units

CXF18SCD (AC018DXSCCF/AA)

Units : mm [inches]

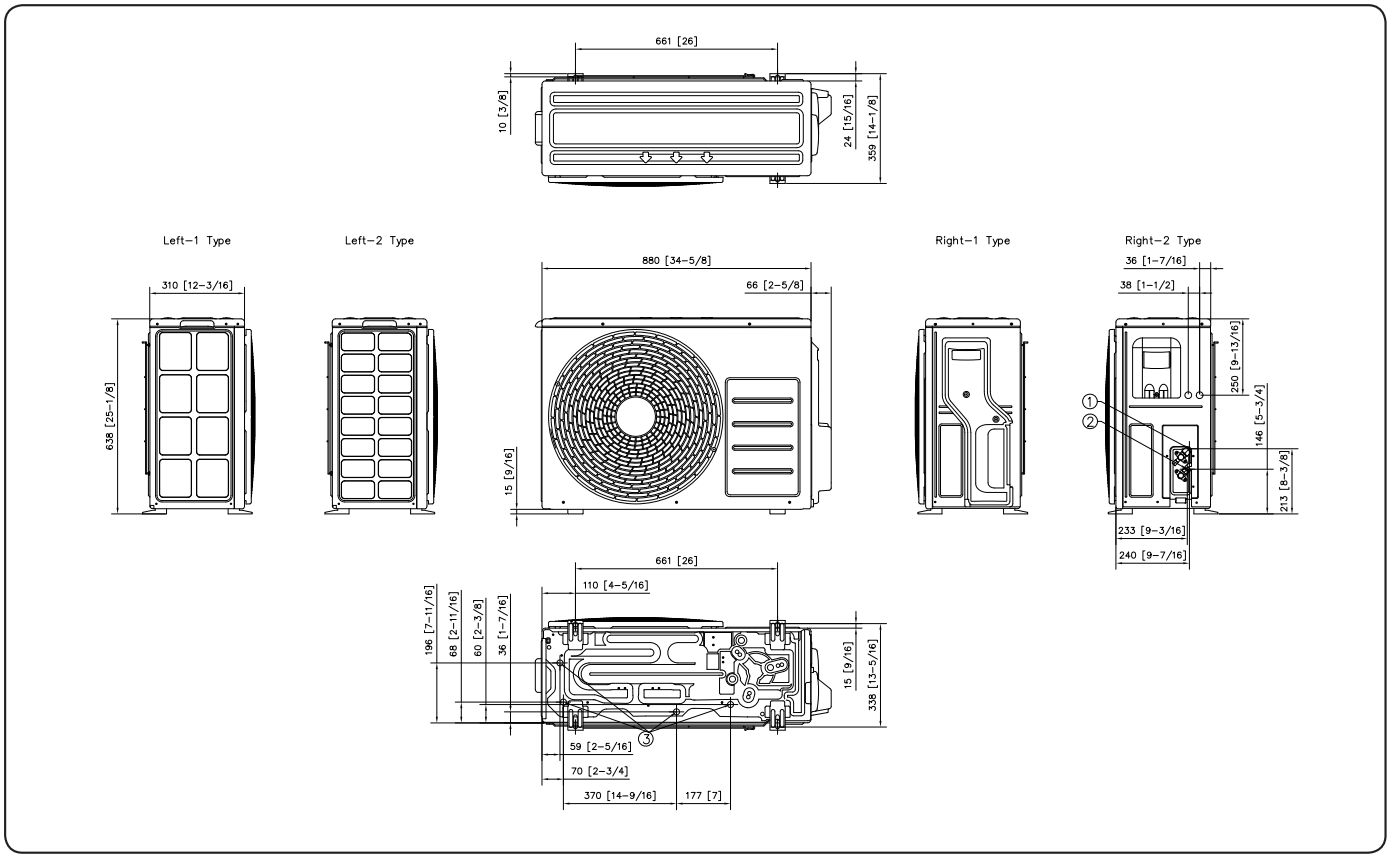

No.	Name	Description
1	Gas pipe connection	Φ 12.7 (1/2)
2	Liquid pipe connection	Φ 6.35 (1/4)
3	Drain pipe connection	

2. Dimensional Drawing

Outdoor Units

CXF24SCD (AC024DXSCCF/AA)

Units : mm [inches]

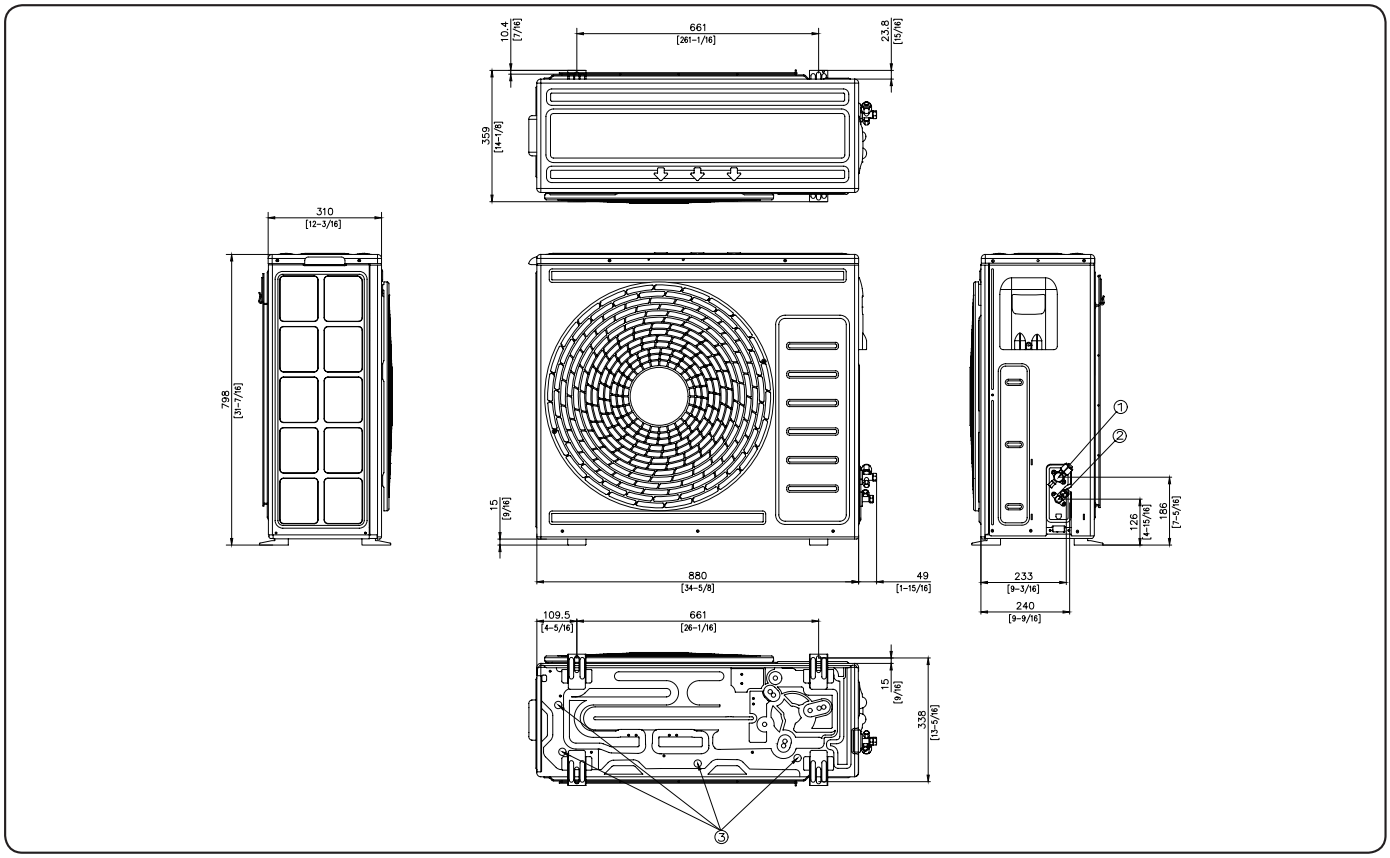

No.	Name	Description
1	Gas pipe connection	Φ 15.88 (5/8)
2	Liquid pipe connection	Φ 6.35 (1/4)
3	Drain pipe connection	

2. Dimensional Drawing

Outdoor Units

CXF30SCD (AC030DXSCCF/AA), CXF36SCD (AC036DXSCCF/AA)

Units : mm [inches]

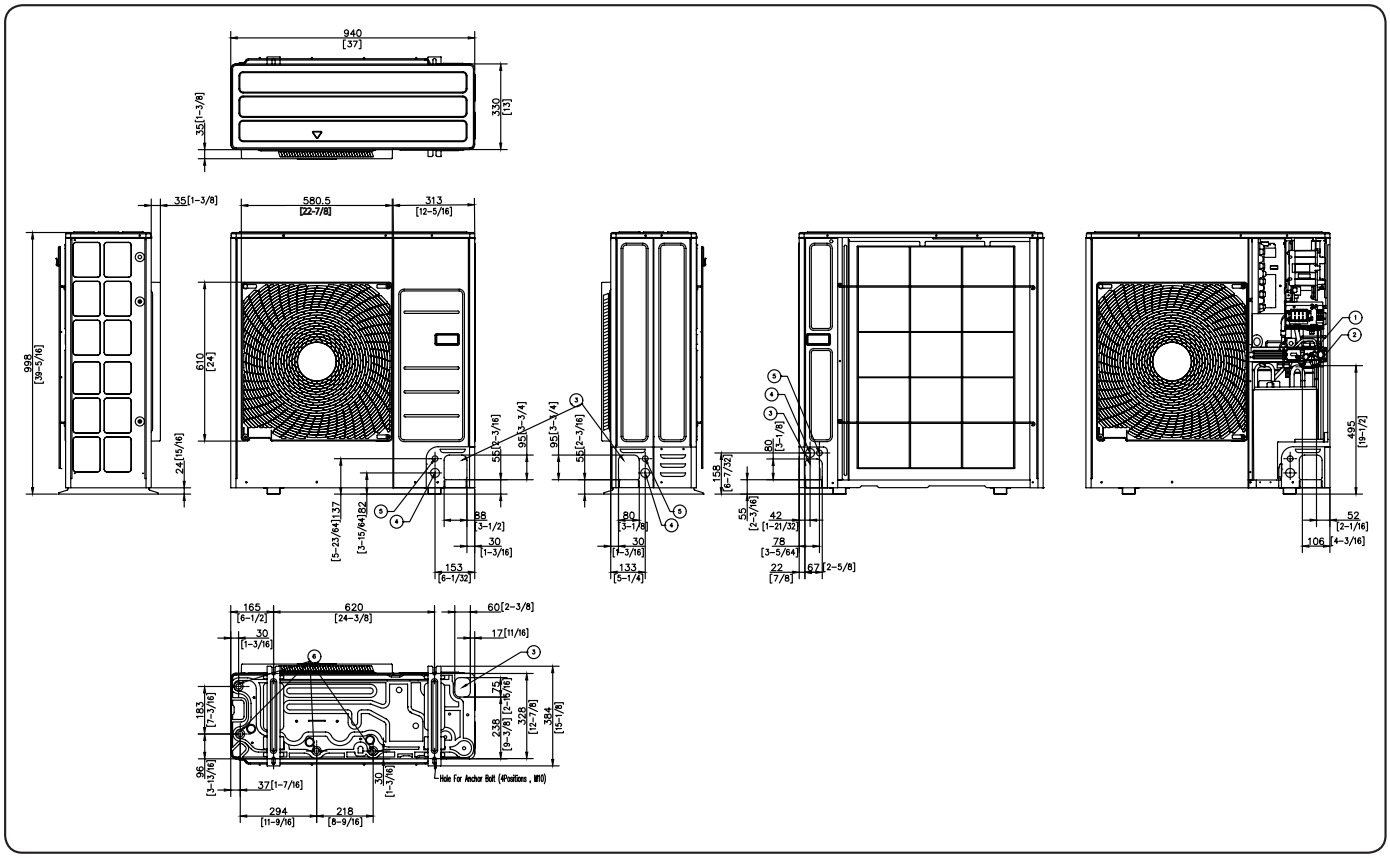

No.	Name	Description
1	Liquid pipe connection	Φ 9.52 (3/8)
2	Gas pipe connection	Φ 15.88 (5/8)
3	Piping intake knockout hole	Front / Side / Rear / Bottom
4	Power wiring conduit	Front / Side / Rear , Φ 3 4(1-3/8)
5	Communication wiring conduit	Front / Side / Rear , Φ 2 2(7/8)
6	Drain Hole	Connect with the provided drain plug

3. Center of Gravity

Outdoor Units

CXF18SCD (AC018DXSCCF/AA)

Units : mm [inches]

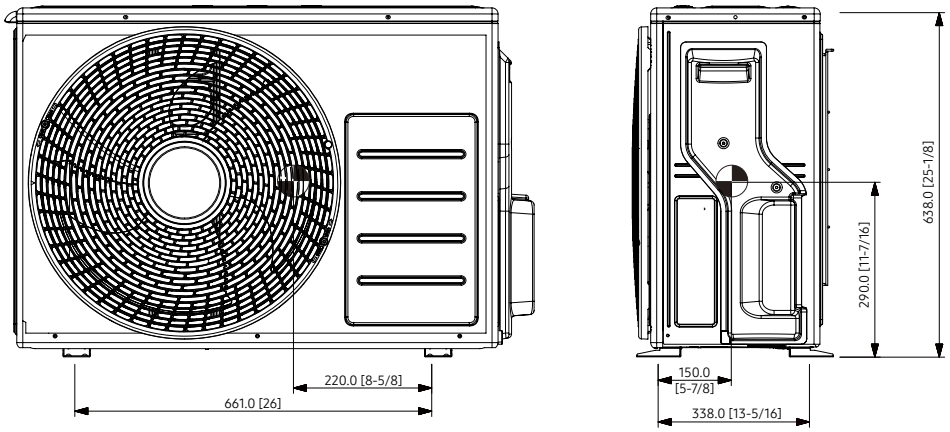

CXF24SCD (AC024DXSCCF/AA)

Units : mm [inches]

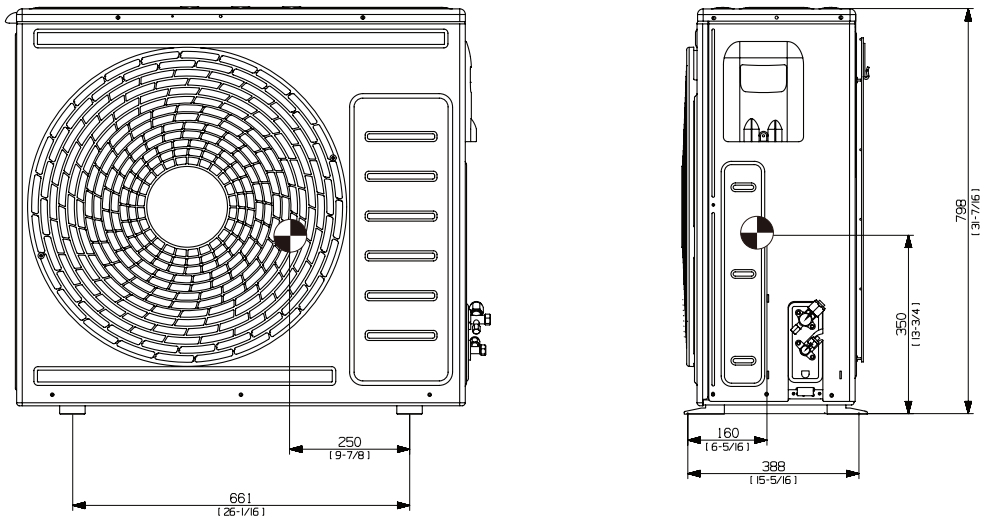

3. Center of Gravity

Outdoor Units

CXF30SCD (AC030DXSCCF/AA), CXF36SCD (AC036DXSCCF/AA)

Units : mm [inches]

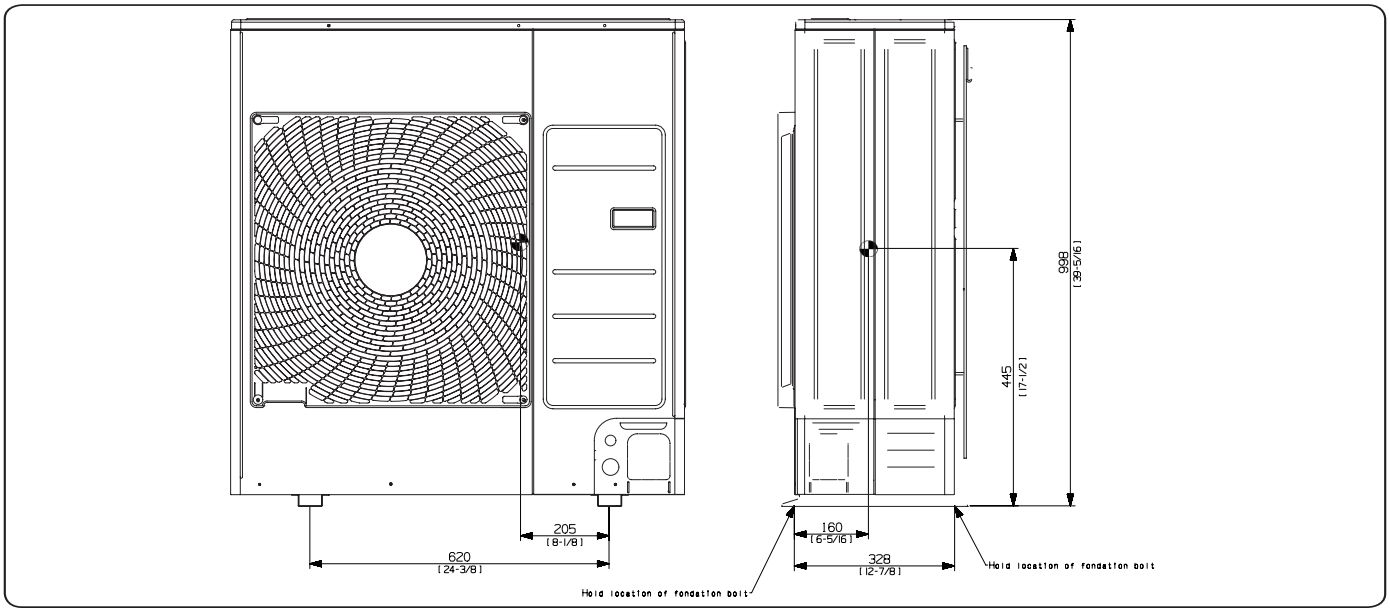

4. Electrical Wiring Diagram

Outdoor Units

CXF18SCD (AC018DXSCCF/AA), CXF24SCD (AC024DXSCCF/AA)

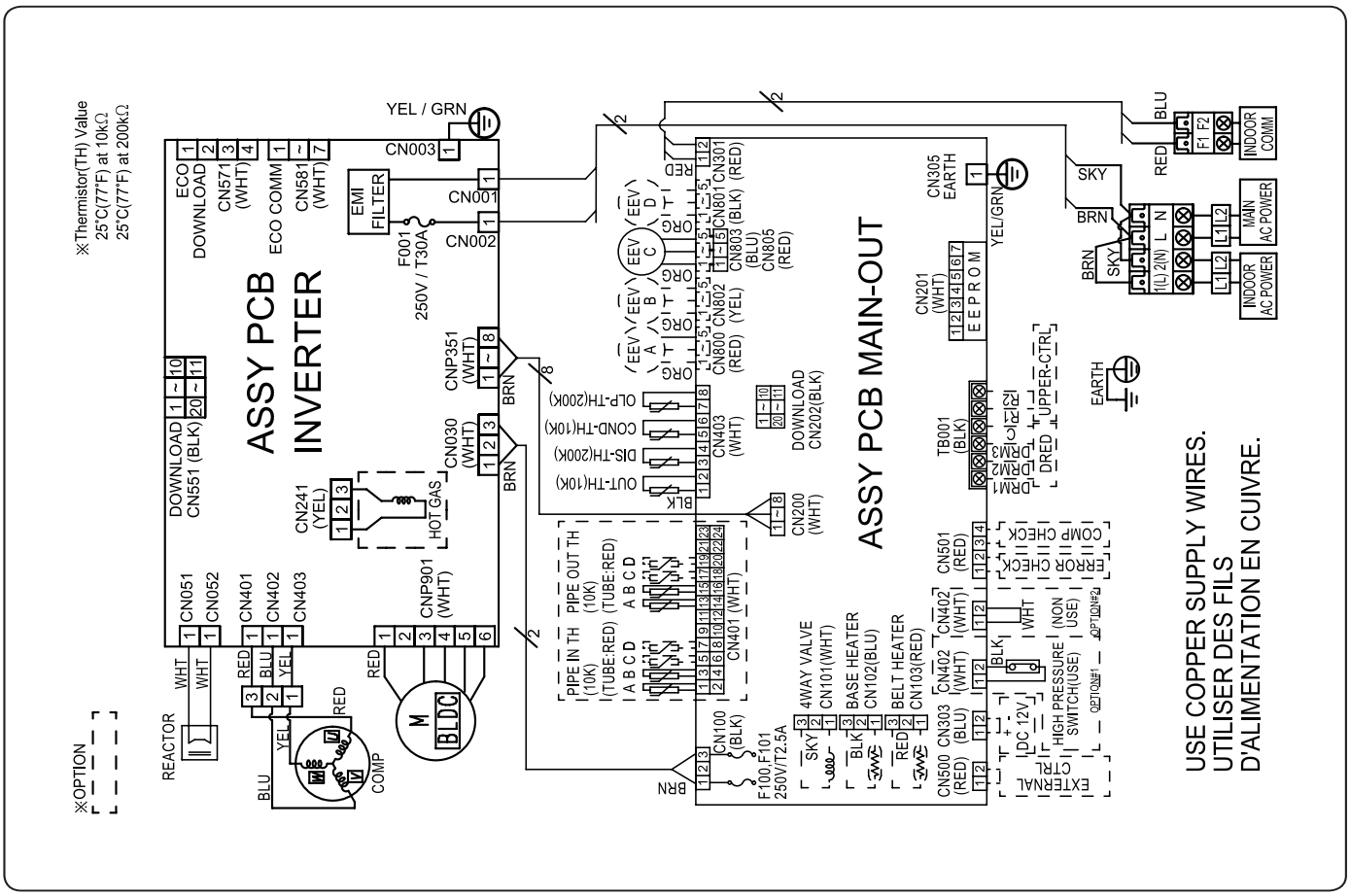

ERROR CHECK	Contact output port for error check	OUT-TH(10K)	OUTDOOR TEMPERATURE SENSOR	EEV	Electronic Expansion Valve
COMP CHECK	Contact output port for compressor operation check	DIS-TH(200K)	DISCHARGE TEMPERATURE SENSOR	EXTERNAL CRTL	Input port for external contact control
INDOOR ROOM(10K)	Thermistor - Indoor Room	COND-TH(10K)	CONDENSOR TEMPERATURE SENSOR	F100, F101	Fuse
PIPE IN TH(10K)	Thermistor - ODU PIPE IN	OLP-TH(200K)	OLP TEMPERATURE SENSOR	M-BLDC	Motor for outdoor Fan
PIPE OUT TH(10K)	Thermistor - ODU PIPE OUT	DISPLAY	Panel LED display		

NOTE

- This wiring diagram applies only to the outdoor unit.
- Colors blk: black, red: red, blu: blue, wht: white, yel: yellow, brn: brown, sky: skyblue
- When operating, don't shortcircuit the protection device (High Pressure switch)
- For connection wiring indoor-outdoor transmission F1-F2, outdoor-outdoor transmission OF1-OF2, refer to the installation manual.
- ⏚ Protective earth(screw), ▭▭▭ : connector, ⫽N : The wire quantity

4. Electrical Wiring Diagram

Outdoor Units

CXF30SCD (AC030DXSCCF/AA), CXF36SCD (AC036DXSCCF/AA)

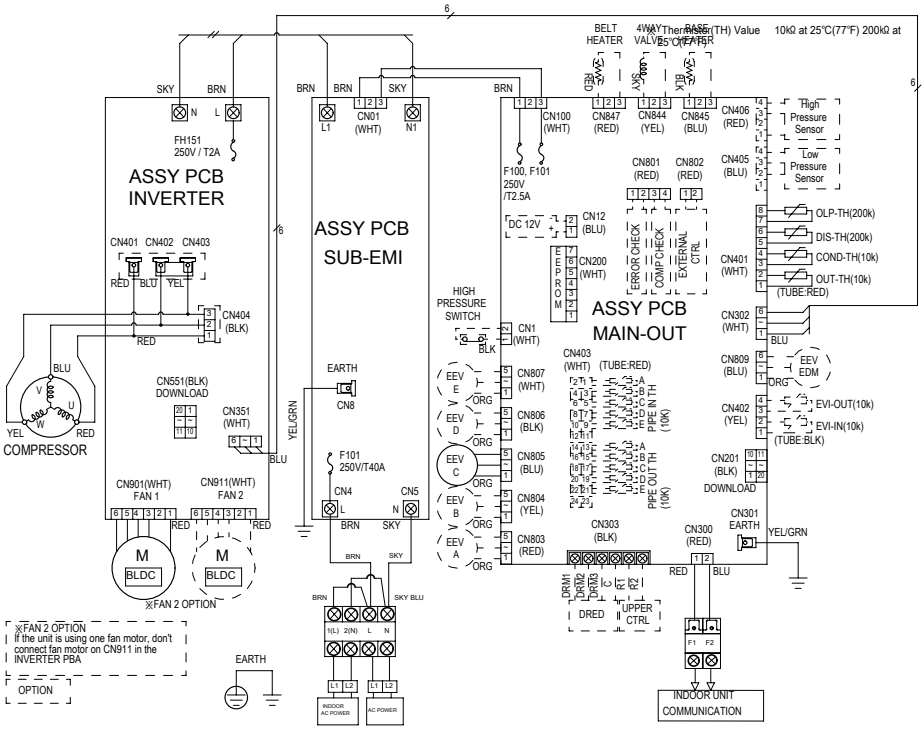

USE COPPER SUPPLY WIRES. UTILISER DES FILS D'ALIMENTATION EN CUIVRE.

M-BLDC	Motor for outdoor Fan	PIPE IN TH(10K)	Thermistor - ODU PIPE IN	EEV	Electronic Expansion Valve
ERROR CHECK	Contact output port for error check	PIPE OUT TH(10K)	Thermistor - ODU PIPE OUT	EXTERNAL CRTL	Input port for external contact control
COMP CHECK	Contact output port for compressor operation check	OUT-TH(10K)	OUTDOOR TEMPERATURE SENSOR	F100, F101	Fuse
INDOOR ROOM(10K)	Thermistor - Indoor Room	DIS-TH(200K)	DISCHARGE TEMPERATURE SENSOR	DISPLAY	Panel LED display
EVI-IN(10K)	ESC IN TEMPERATURE SENSOR	COND-TH(10K)	CONDENSOR TEMPERATURE SENSOR		
EVI-OUT(10K)	ESC OUT TEMPERATURE SENSOR	OLP-TH(200K)	OLP TEMPERATURE SENSOR		

NOTE

- This wiring diagram applies only to the outdoor unit.
- Colors blk: black, red: red, blu: blue, wht: white, yel: yellow, brn: brown, sky: skyblue
- When operating, don't shortcircuit the protection device (High Pressure switch)
- For connection wiring indoor-outdoor transmission F1-F2, outdoor-outdoor transmission OF1-OF2, refer to the installation manual.
- ⏚ Protective earth(screw), ▭▭▭▭ : connector, N : The wire quantity

5. Sound Data

Outdoor Units

Sound Pressure level

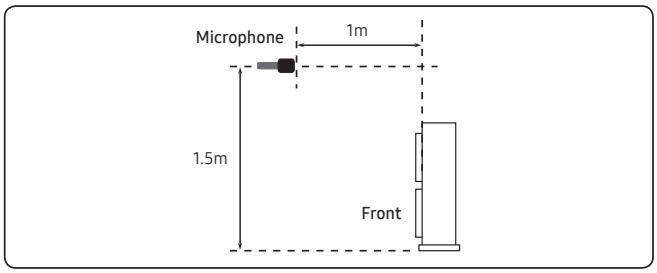

Unit: dB(A)

Model	Cooling	Heating
CXF18SCD (AC018DXSCCF/AA)	48	-
CXF24SCD (AC024DXSCCF/AA)	50	-
CXF30SCD (AC030DXSCCF/AA)	52	-
CXF36SCD (AC036DXSCCF/AA)	54	-

- NC Curve

1) CXF18SCD (AC018DXSCCF/AA)

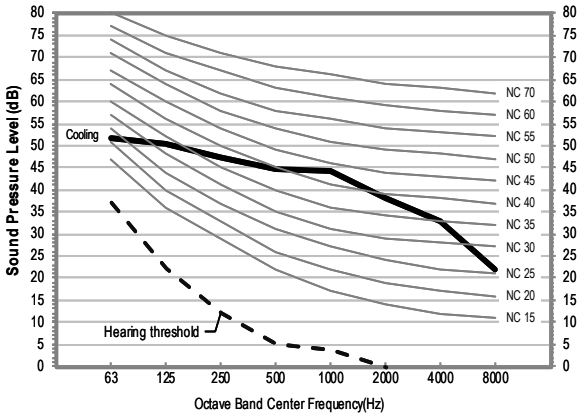

2) CXF24SCD (AC024DXSCCF/AA)

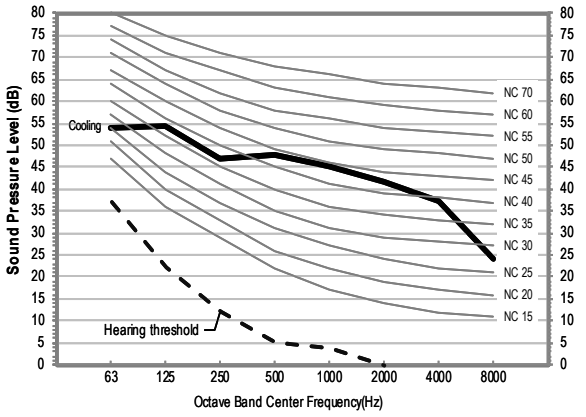

3) CXF30SCD (AC030DXSCCF/AA)

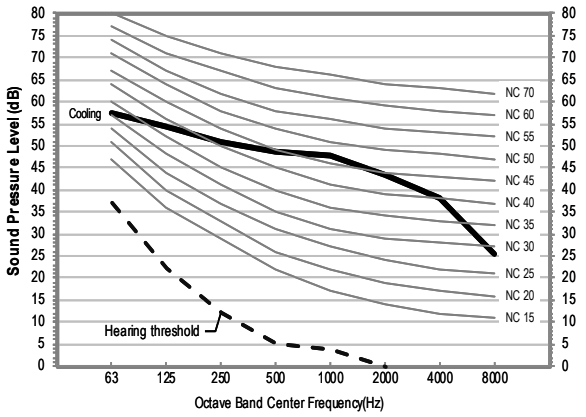

4) CXF36SCD (AC036DXSCCF/AA)

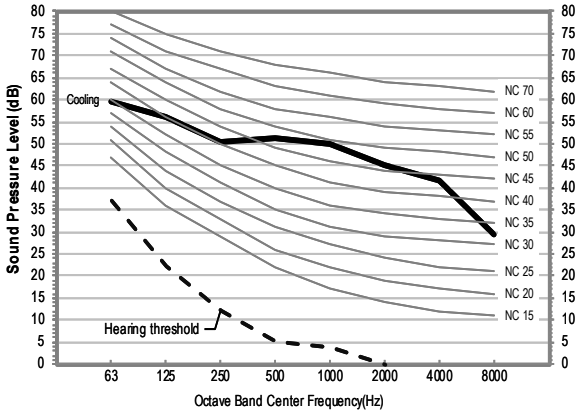

NOTE

- Specifications may be subject to change without prior notice.
  - Sound pressure level is obtained in an anechoic room.
  - Sound pressure level is a relative value, depending on the distance and acoustic environment.
  - Sound pressure level may differ depending on operation condition.
  - dBA = A weighted sound pressure level
  - Reference acoustic pressure 0 dB = 20μPa

5. Sound Data

Outdoor Units

Sound Power level

NOTE

- Specifications may be subject to change without prior notice
  - Sound power level is an absolute value that a sound source generates.
  - dBA = A-weighted sound power level.
  - Reference power : 1pW.
  - Measured according to ISO 3741.

Unit: dB(A)

Model	Cooling
CXF18SCD (AC018DXSCCF/AA)	62
CXF24SCD (AC024DXSCCF/AA)	65
CXF30SCD (AC030DXSCCF/AA)	67
CXF36SCD (AC036DXSCCF/AA)	69

- NC Curve

1) CXF18SCD (AC018DXSCCF/AA)

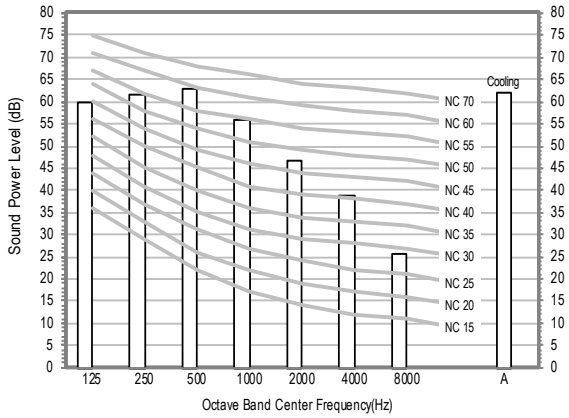

2) CXF24SCD (AC024DXSCCF/AA)

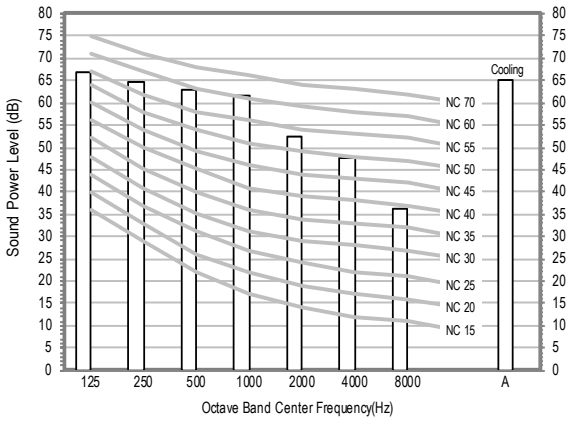

3) CXF30SCD (AC030DXSCCF/AA)

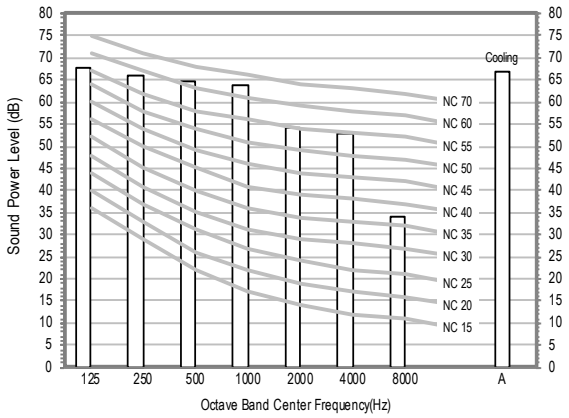

4) CXF36SCD (AC036DXSCCF/AA)

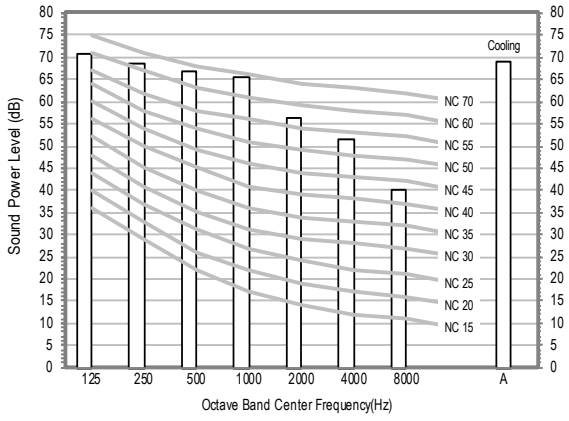

6. Capacity Correction

Outdoor Units

CXF18SCD (AC018DXSCCF/AA)

Cooling

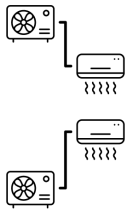

		Pipe Length (ft)					
		24.6	32.8	49.2	65.6	82.0	98.4
Level Difference (ft)	65.6	-	-	-	0.97	0.96	0.95
	49.2	-	-	0.98	0.97	0.96	0.95
	32.8	-	0.99	0.98	0.97	0.96	0.95
	16.4	1.00	0.99	0.98	0.97	0.96	0.95
	0.0	1.00	0.99	0.98	0.97	0.96	0.95
	-16.4	1.00	0.99	0.98	0.97	0.96	0.94
	-32.8	-	0.98	0.97	0.96	0.95	0.93
	-49.2	-	-	0.97	0.96	0.95	0.92
	-65.6	-	-	-	0.96	0.94	0.91

CXF24SCD (AC024DXSCCF/AA), CXF30SCD (AC030DXSCCF/AA), CXF36SCD (AC036DXSCCF/AA)

Cooling

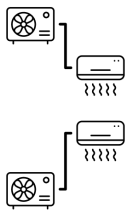

		Pipe Length (ft)									
		24.6	32.8	49.2	65.6	82.0	98.4	114.8	131.2	147.6	164.0
Level Difference (ft)	98.4	-	-	-	-	-	0.95	0.94	0.93	0.92	0.90
	82.0	-	-	-	-	0.96	0.95	0.94	0.93	0.92	0.90
	65.6	-	-	-	0.97	0.96	0.95	0.94	0.93	0.92	0.90
	49.2	-	-	0.98	0.97	0.96	0.95	0.94	0.93	0.92	0.90
	32.8	-	0.99	0.98	0.97	0.96	0.95	0.94	0.93	0.92	0.90
	16.4	1.00	0.99	0.98	0.97	0.96	0.95	0.94	0.93	0.92	0.90
	0.0	1.00	0.99	0.98	0.97	0.96	0.95	0.94	0.93	0.92	0.90
	-16.4	1.00	0.98	0.97	0.96	0.95	0.94	0.93	0.92	0.90	0.88
	-32.8	-	0.98	0.97	0.96	0.95	0.94	0.92	0.91	0.89	0.87
	-49.2	-	-	0.97	0.96	0.94	0.93	0.92	0.90	0.88	0.85
	-65.6	-	-	-	0.95	0.94	0.93	0.91	0.89	0.87	0.83
	-82.0	-	-	-	-	0.94	0.92	0.91	0.89	0.86	0.82
	-98.4	-	-	-	-	-	0.92	0.90	0.88	0.85	0.80

7. Operation Range

Outdoor Units

Cooling

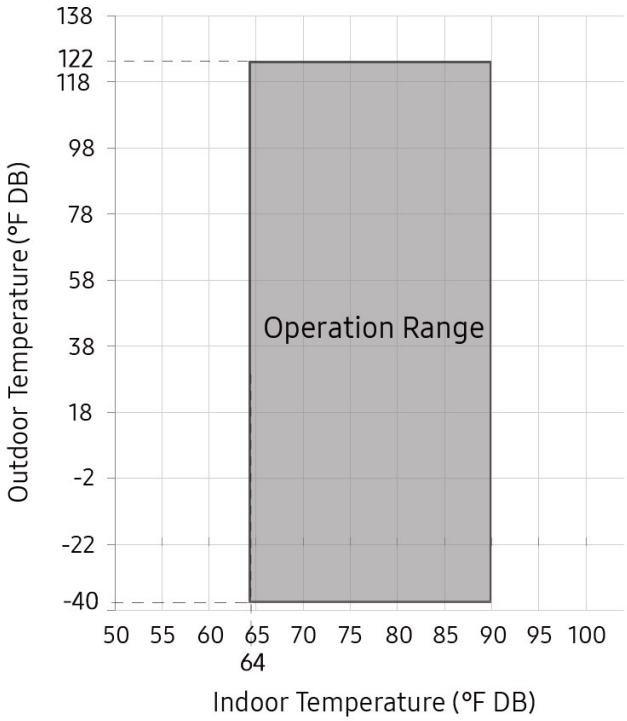

NOTE

- The assumed installation conditions are follows
  - The pipe length(including elbow) is 7.5m(24.6ft).
  - The level difference is 0 m.

8. Piping Diagram

Outdoor Units

CNG184DD (AC018DN4DCG/AA) + CXF18SCD (AC018DXSCCF/AA)

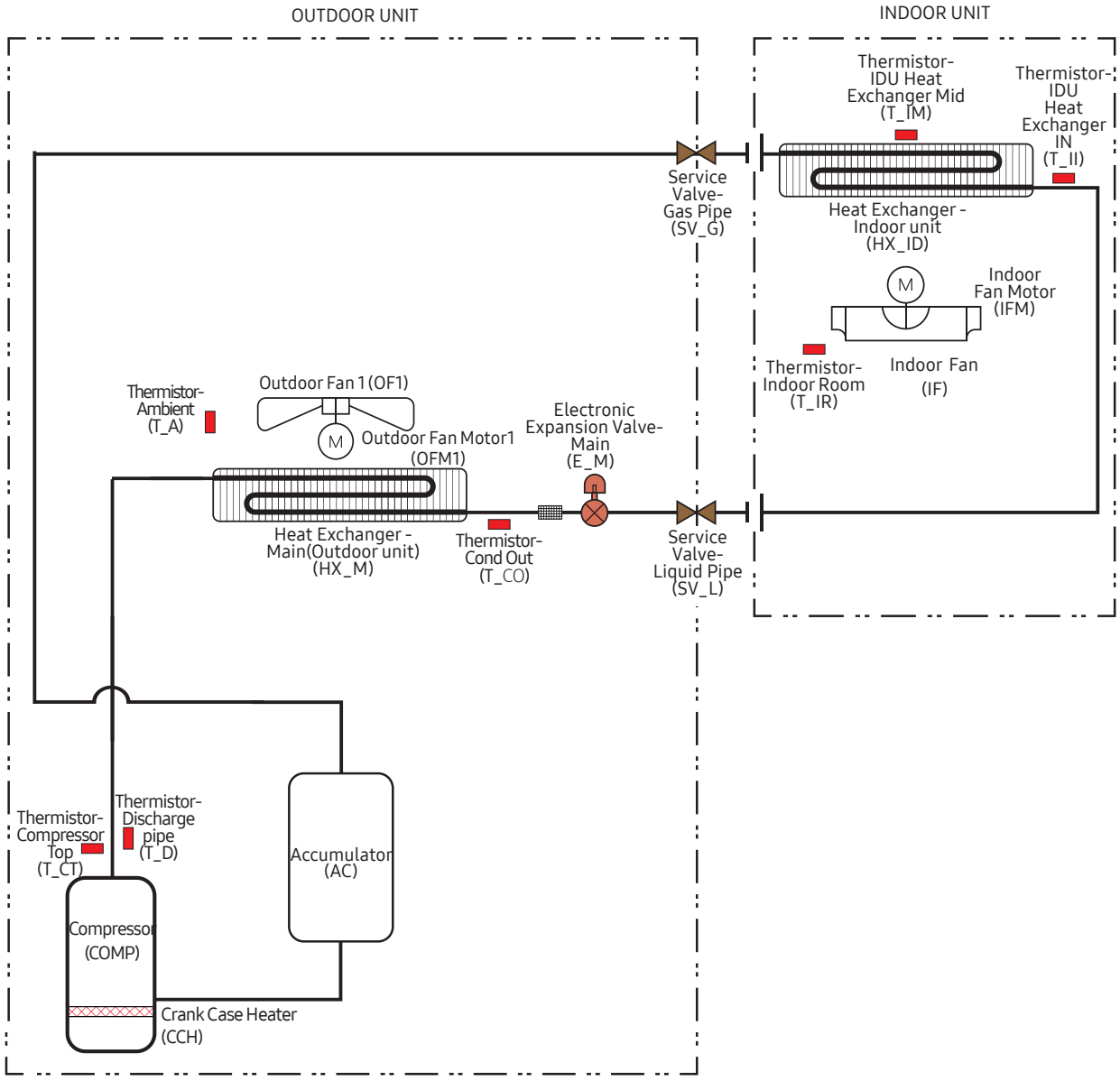

8. Piping Diagram

Outdoor Units

CNG244DD (AC024DN4DCG/AA) + CXF24SCD (AC024DXSCCF/AA)

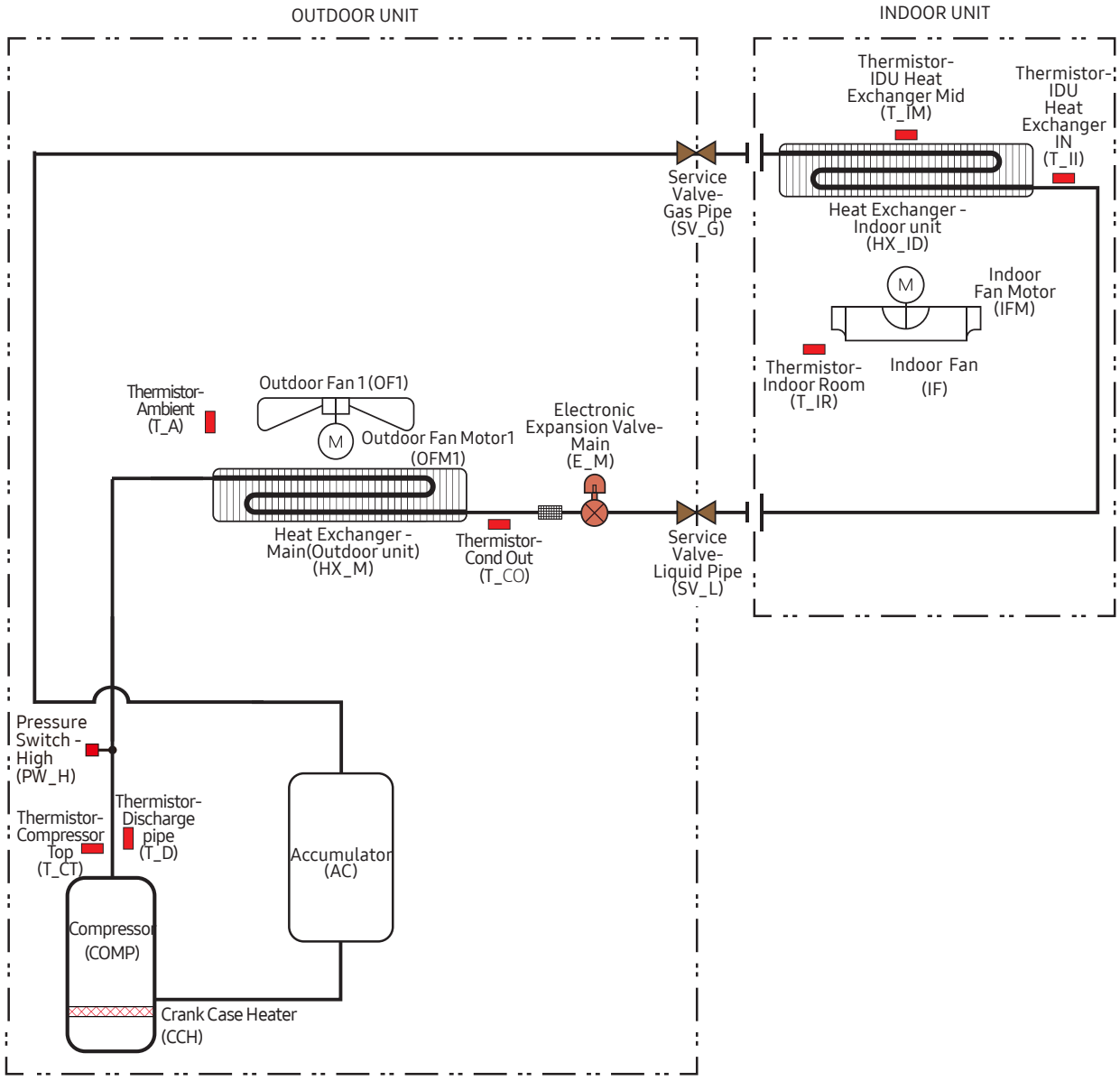

8. Piping Diagram

Outdoor Units

CNG304DD (AC030DN4DCG/AA) + CXF30SCD (AC030DXSCCF/AA)
CNG364DD (AC036DN4DCG/AA) + CXF36SCD (AC036DXSCCF/AA)

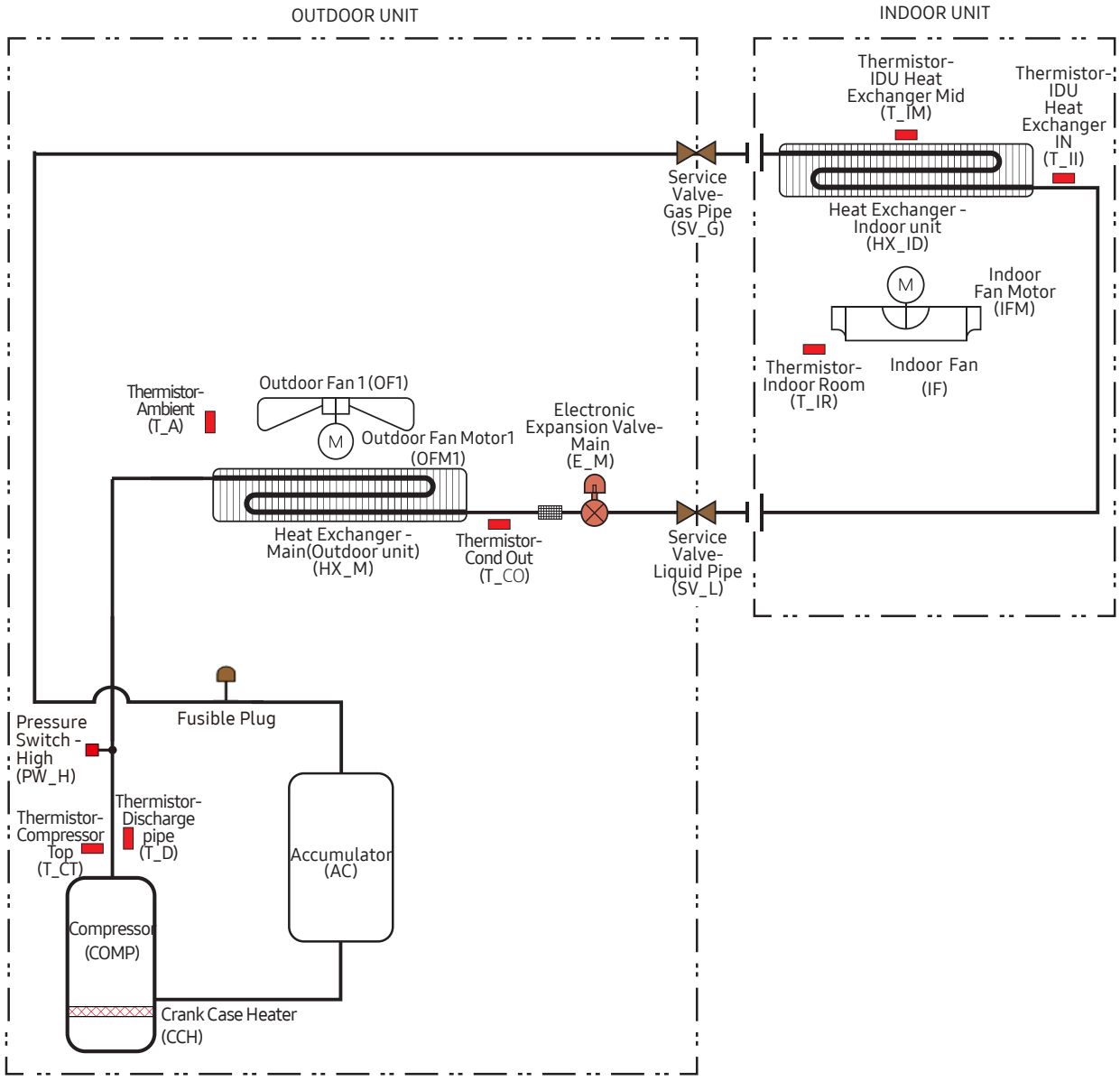

2024.12
Ver.1.1

Samsung Electronics Co., LTD.

Head Office (Suwon Korea) 129, Samsung-Ro, Yeongtong-Gu, Suwon City, Gyeonggi-Do, Korea 16677
Website : www.samsung.com, https://partnerhub.samsung.com Email : airconditioner@samsung.com
Images and data in this book may subject to change without prior notice.