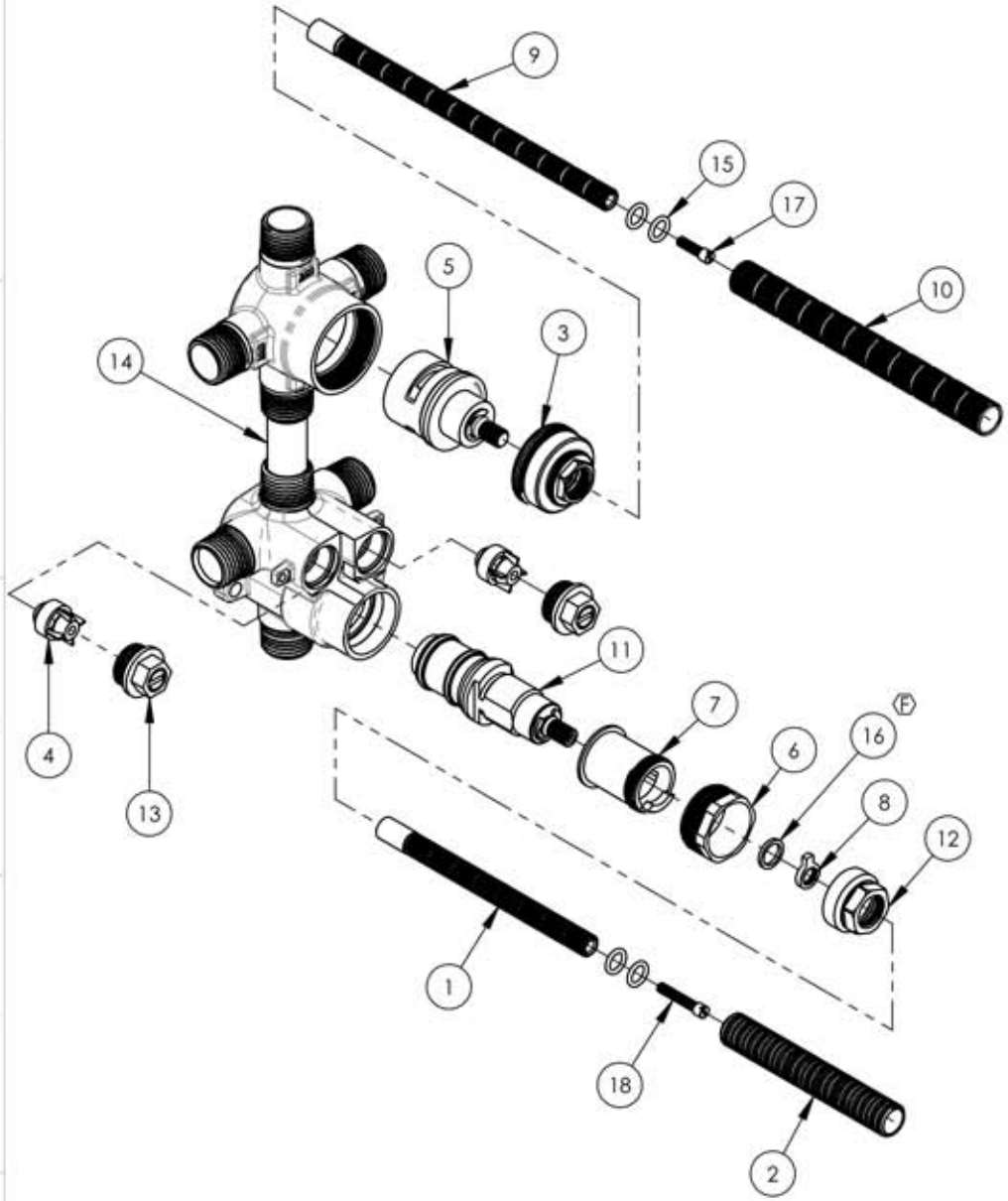

ITEM NO.	PART NUMBER	DESCRIPTION	QTY.
1	10054	STEM EXTENSION, 6" LONG 20PT INT. TO 16PT LONG EXT. BROACH	1
2	10209	SHANK, NIPPLE THREAD ALL 9/16"-20UN WITH .433"ID	1
3	10349	NUT CAP FOR 3WAY DIVERTER	1
4	11197	CHECK VALVE, MINI THERMO	2
5	11297	CARTRIDGE, DIVERTER, 3WAY, NON-SHARE W/ OFF	1
6	11318	RETAINER NUT FOR MINI THERM CARTRIDGE	1
7	11319	CARTRIDGE RETAINER SLEEVE, MINI THERM	1
8	11320	SAFETY AND MECHANICAL STOP, MINI THERM	1
9	11416	STEM EXTENSION, 20PT TO 16PT, XXL	1
10	11498	ALL THREAD, EXTENSION, 9/16"-20, 5-9/16"L, XXL	1
11	11573	CARTRIDGE VALVE, MINI THERM, THERMOSTAR S18 TYP 2	1
12	11617	NUT, SHORT ADAPTOR ALL-THREAD	1
13	2-130	SHUTOFF NUT, MINI THERMO	2
14	2-242	SUB-ASSY, BRAZED MINI-THERM W/ DIV, 5" C-C	1
	10624	BODY, MINI THERMOSTATIC	1
	11538	COPPER TUBE, FOR 5" CENTER-CENTER, 2"L	1
	10348	DIVERTER BODY	1
15	90011	O-RING, 5/16"ID X 7/16"OD X 1/16"THK, AS-568-011	4
16	92050	WASHER ACETAL 0.060 THK	1
17	92157	SCREW, SMALL HD M4X0.7 - 1/2"L	1
18	92335	SCREW, FLAT HEAD, M4X0.7 - 1" OVERALL LENGTH	1

ZONE	REV.	DESCRIPTION	DATE	APPROVED
C3	F	ADDED ACETAL WASHER	5/22/2019	AMM

REVISIONS

1261 LOGAN AVENUE
COSTA MESA, CALIFORNIA 92626
PHONE: 714.361.4800
FAX: 714.617.3120

PHYLRICH®
Defining Luxury Since 1959

PROPRIETARY AND CONFIDENTIAL
THE INFORMATION CONTAINED IN THIS DRAWING IS THE SOLE PROPERTY OF RSS MANUFACTURING. ANY REPRODUCTION IN PART OR AS A WHOLE WITHOUT THE WRITTEN PERMISSION OF RSS MANUFACTURING IS PROHIBITED.

NEXT ASSY	USED ON
-	-
-	-
-	-

APPLICATION

MATERIAL

FINISH

DO NOT SCALE DRAWING

INTERPRET GEOMETRIC DIMENSIONING & TOLERANCING IN ACCORDANCE WITH ASME Y14.5-2009 & ASME Y14.41-2003 STANDARDS. UNLESS OTHERWISE SPECIFIED, DIMENSIONS ARE IN INCHES. TOLERANCES ARE:

FRACTIONS	DECIMALS	ANGULAR
±1/64"	X.X: ±.1 X.XX: ±.01 X.XXX: ±.005	±.5°

	NAME	DATE
DRAWN		11/7/2014
CHECKED		

1/2" MINI-THERMOSTATIC W/ 3-WAY DIVERTER, CAL-GREEN

SIZE	ASM/PRT NO.	REV
A	1-117	F

SCALE: 1:3 | WEIGHT: lbs. | SHEET 1 OF 2