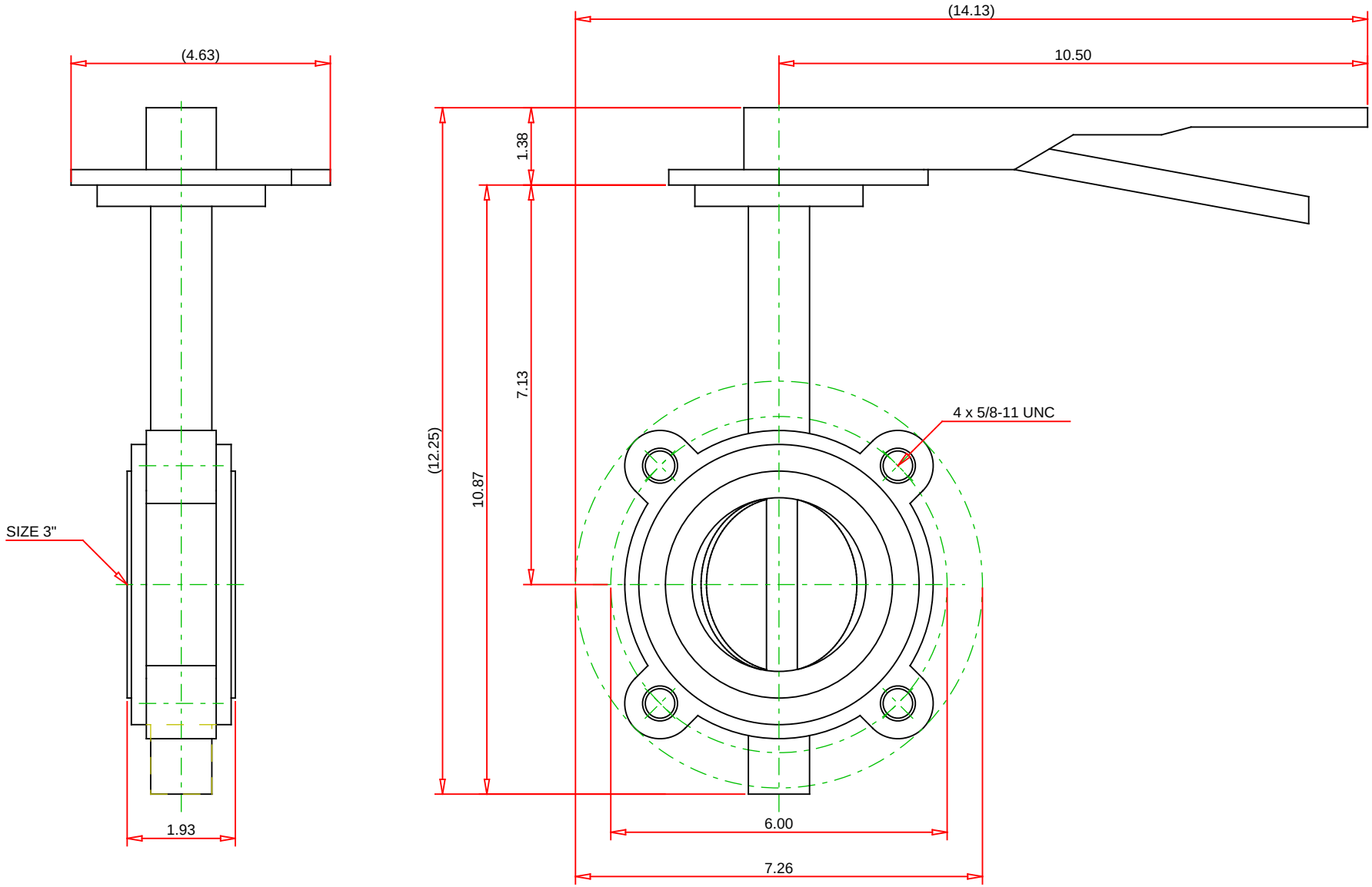

DATE	29-OCT-2021

Note :
- Drawing not to Scale
- Dimensions subject to change.
- All dimensions are nominal values and for reference only.

Part No. :

NLJ300F

Description :

N200235 - Butterfly Valve - Cast Iron, 200 PSI, International

NIBCO INC.

Address : 1516 Middlebury Street
P.O. Box 1167 Elkhart

Tel. : 800.234.0227

Email : Info@nibco.com

Web : http://www.nibco.com/