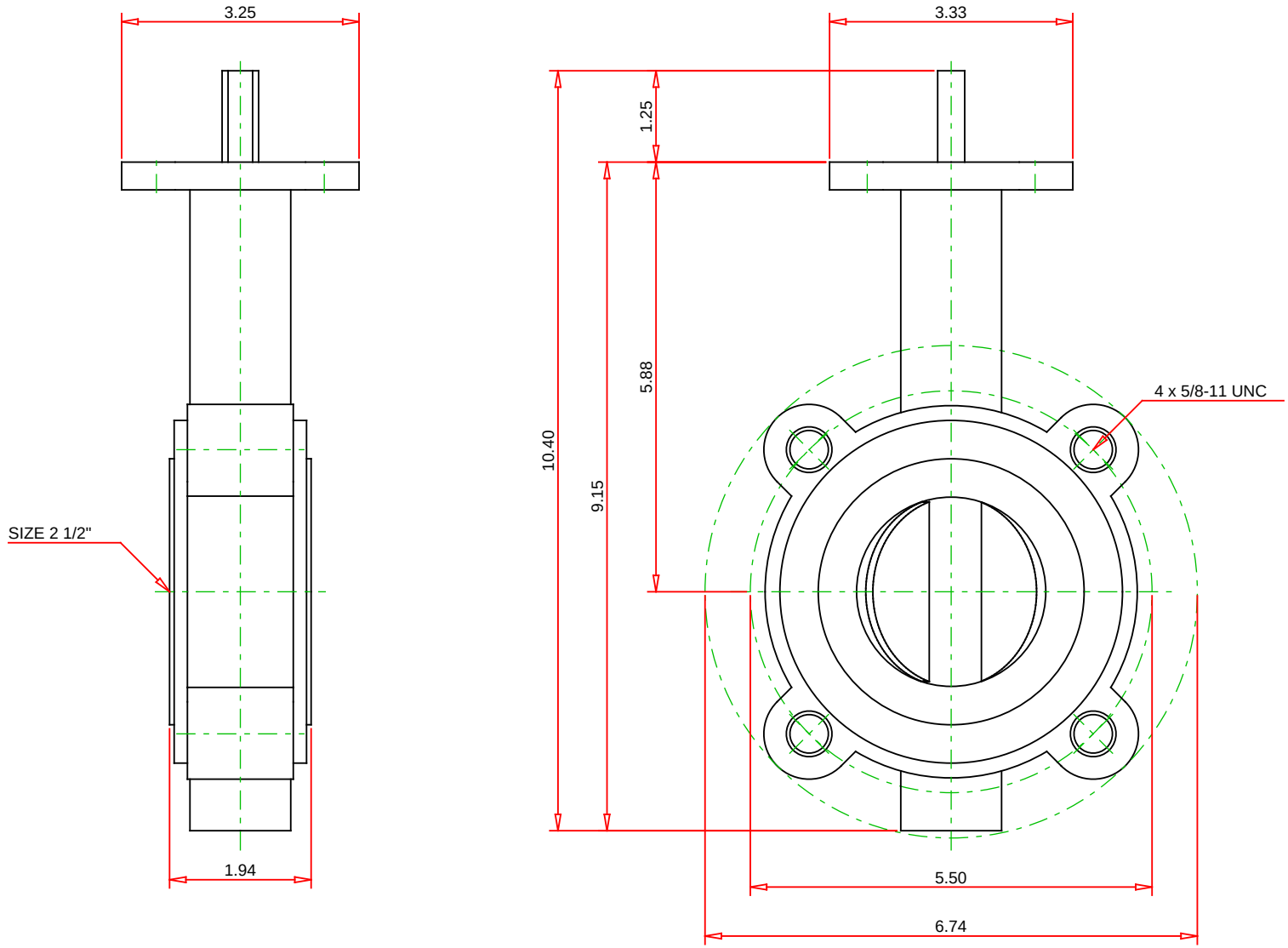


| DATE | 20-MAY-2022 |
|---|---|

Note :
- Drawing not to Scale
- Dimensions subject to change.
- All dimensions are nominal values and for reference only.

Part No. :

NLG090E

Description :

LD-2000 - Butterfly Valve - Ductile Iron, Lug Type, 200 PSI

NIBCO INC.

Address : 1516 Middlebury Street

P.O. Box 1167 Elkhart

Tel. : 800.234.0227

Email : Info@nibco.com

Web : http://www.nibco.com/