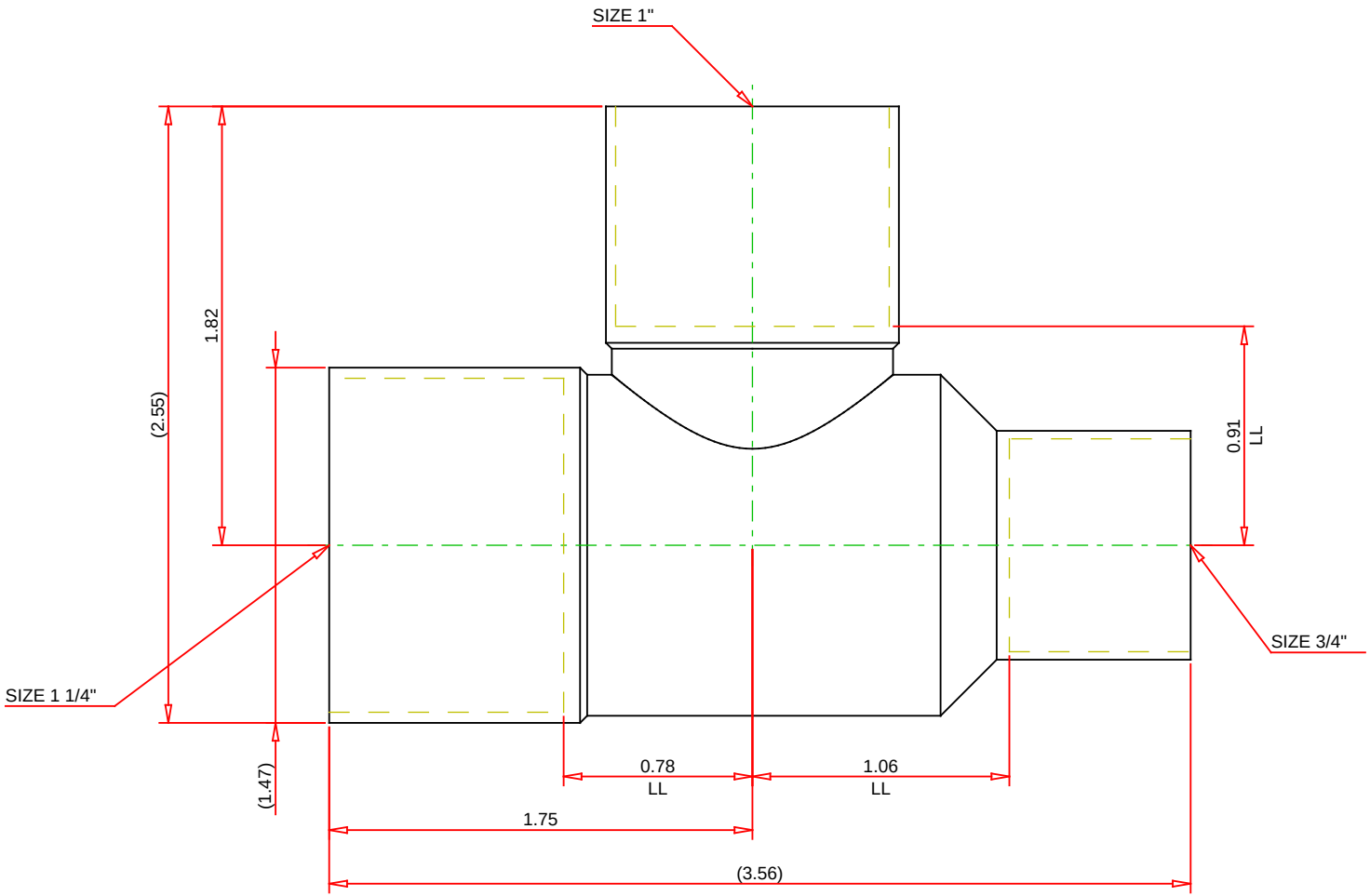

DATE	26-OCT-2021

Note : - Drawing not to Scale
- Dimensions subject to change.
- All dimensions are nominal values and for reference only.

Part No. :

9100750

Description :

Tee C x C x C - Wrot, 611

NIBCO INC.

Address : 1516 Middlebury Street
P.O. Box 1167 Elkhart

Tel. : 800.234.0227

Email : Info@nibco.com

Web : http://www.nibco.com/