SMITH® JAY R. SMITH MFG. CO.®
MEMBER OF MORRIS GROUP INTERNATIONAL
POST OFFICE BOX 3237
MONTGOMERY, ALABAMA 36109-0237 (USA)
TEL: 334-277-8520 FAX: 334-272-7396 www.jrsmith.com
CUSTOMER DRIVEN SINCE 1926
MEMBER OF:

LOCATION

SANI-CEPTOR® ACID RESISTANT COATED FLOOR & INDIRECT WASTE DRAINS

ROUND NICKEL BRONZE TOP
8 1/2" (215) TOP - SHALLOW RECEPTORS

FUNCTION: Used in kitchens, hospitals, food markets, restaurants, schools and all types of food handling areas where the ultimate in sanitation is desirable and a small capacity receptor is required.

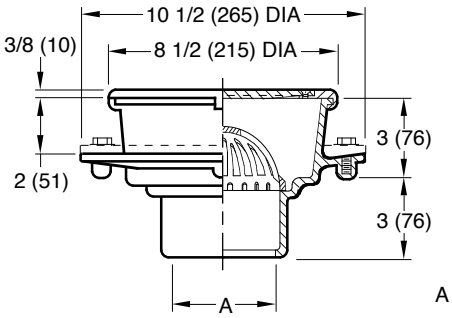

WITH DOME BOTTOM STRAINER

Free Area
17.35 SQ IN
(112) SQ CM

A (Pipe Size) = 02(50), 03(80) or 04(100)

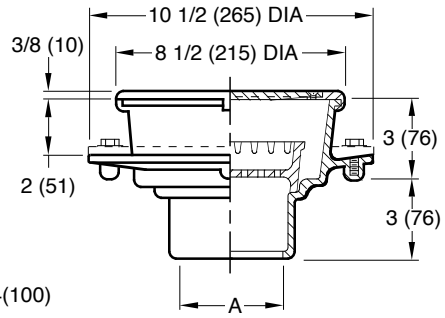

WITH SEDIMENT BUCKET

☐ **Fig. 3020C . . . . . CAULK OUTLET . . . . . Fig. 3021C** ☐
☐ **Fig. 3020Y . . . . . NO-HUB OUTLET . . . . . Fig. 3021Y** ☐

FEATURES, OPTIONS & ORDERING INFORMATION

REGULARLY FURNISHED: Cast Iron Flanged Receptor with Seepage Holes, Acid Resistant Coated Interior, Nickel Bronze Rim and Secured Grate. Aluminum Dome Bottom Strainer or Sediment Bucket as Indicated by Figure Number.

VARIATIONS:
- ☐ Aluminum Flat Bottom Strainer -FBS
- ☐ Flashing Clamp -C
- ☐ Less Flange (Specify Fig. 3025, 3026)
- ☐ Polished Aluminum Dome Bottom Strainer-PDBS
- ☐ Vandal Proof Screws -U
- ☐ L Speedi-Set Service Weight
- ☐ LXH Speedi-Set Extra Heavy

OPTIONAL MATERIALS:
- ☐ All Duco Cast Iron Receptor -CI
- ☐ All Galvanized Receptor -G

SUFFIX NUMBER ROUND RIM	DESCRIPTION
-10	Less NB Rim and Grate
-11	Less Grate w/NB Rim
-12	With NB Rim and 1/2 Grate
-13	With NB Rim and 3/4 Grate
-14	With NB Rim and Grate with 2 1/2"(64) SQ Center Hole
-15	With NB Rim and Aluminum Recessed Grate
-19	With NB Rim and Hinged Grate
-21	With NB Rim and Grate with 4"(100) DIA NB Funnel
-22	With NB Rim and Grate with 6"(150) DIA NB Funnel
-25	With NB Rim and Grate with 8 1/4(210) x 3 1/4(83) x 4 1/2"(115) High Oval NB Funnel
-26	With NB Rim and Grate with 6(150) x 2 1/2(64) x 1"(25) High Oval NB Funnel
-41	With NB Rim and Solid Cover
-42	With NB Rim and 1/2 Solid Cover
-43	With NB Rim and 3/4 Solid Cover
-44	With NB Rim and Solid Cover with 2 1/2"(64) DIA Center Hole

NOTE: Dimensions shown in parentheses are in millimeters.

REV.	DATE	DESCRIPTION	BY	CKD. BY
E	8-13-15	Revised Variations	TBW	CL
D	8-23-96	Added Millimeters	EMB	BS
C	7-12-94	Revised	EMB	BS
B	12-1-93	Submittal Update	EMB	BS

WEIGHT POUNDS | VOLUME CUBIC FEET

FIGURE NUMBER **3020, 3021**

E | DRAWING NUMBER S3020 | SIZE A | SCALE: NONE | DATE: 9-19-85 | APPROVED BY: SJM | CHECKED BY: JD | DRAWN BY: PJ | FIGURE NUMBER 3020, 3021

DIMENSIONS ARE SUBJECT TO MANUFACTURERS TOLERANCE AND CHANGE WITHOUT NOTICE
WE CAN ASSUME NO RESPONSIBILITY FOR USE OF SUPERSEDED OR VOID DATA

WARNING: Cancer and Reproductive Harm - www.P65Warnings.ca.gov