SMITH® JAY R. SMITH MFG. CO.®
MEMBER OF MORRIS GROUP INTERNATIONAL
POST OFFICE BOX 3237
MONTGOMERY, ALABAMA 36109-0237 (USA)
TEL: 334-277-8520 FAX: 334-272-7396 www.jrsmith.com
CUSTOMER DRIVEN SINCE 1926
MEMBER OF:

LOCATION

FLOOR OR SHOWER DRAINS
WITH ADJUSTABLE STRAINER HEADS

FUNCTION: General service floor drain for use in showers, toilets, kitchens and other finished areas where foot traffic is expected. Large selection of body styles permits adaptability to all types of construction variations and plumbing codes.

SHALLOW TRAP - SIDE OUTLET

A SIZE	B	D	E	F Seal	G	H	MIN-X-MAX	
02 (51)	05 (125)	1 3/4 (44)	5 (125)	2 (51)	6 3/4 (170)	9 1/2 (240)	1 1/4 (32)	2 1/4 (57)
03 (76)	06 (150)	2 1/4 (57)	4 1/2 (115)	2 (51)	9 (230)	12 1/4 (310)	1 1/4 (32)	2 1/4 (57)
04 (100)	08 (205)	3 (76)	8 1/2 (215)	2 1/2 (64)	10 (255)	12 3/4 (325)	1 1/2 (38)	2 1/2 (64)

THREAD OUTLET ***SPIGOT OUTLET**

Fig. 2020T . . . (A) ROUND TOP 2021S
Fig. 2020T . . . (B) SQUARE TOP . . . 2021S

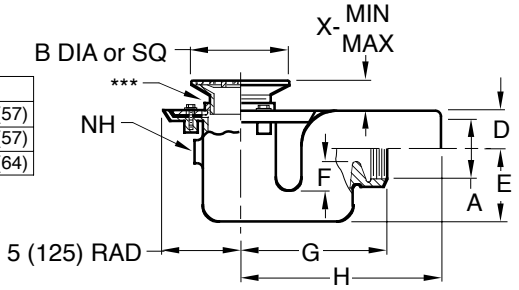

DEEP TRAP - SIDE OUTLET

A SIZE	B	D	E	F Seal	G	H	MIN-X-MAX	
02 (51)	05 (125)	1 3/4 (44)	5 1/4 (135)	2 (51)	5 (125)	8 (205)	1 1/4 (32)	2 1/4 (57)
03 (76)	06 (150)	2 (51)	7 (180)	2 1/4 (57)	8 (205)	10 (255)	1 1/4 (32)	2 1/4 (57)
04 (100)	08 (205)	3 (76)	8 1/2 (215)	2 1/2 (64)	10 (255)	12 3/4 (325)	1 1/2 (38)	2 1/2 (64)

THREAD OUTLET ***SPIGOT OUTLET**

Fig. 2030T . . . (A) ROUND TOP 2031S
Fig. 2030T . . . (B) SQUARE TOP . . . 2031S

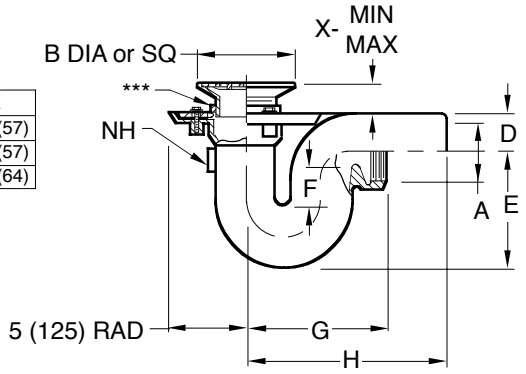

DEEP TRAP WITH FLOOR CLEANOUT - SIDE OUTLET

A SIZE	B	MIN-X-MAX	
02 (51)	05 (125)	1 1/4 (32)	2 1/4 (57)
03 (76)	06 (150)	1 1/4 (32)	2 1/4 (57)
04 (100)	08 (205)	1 1/2 (38)	2 1/2 (64)

THREAD OUTLET ***SPIGOT OUTLET**

Fig. 2040T . . . (A) ROUND TOP 2041S
Fig. 2040T . . . (B) SQUARE TOP . . . 2041S

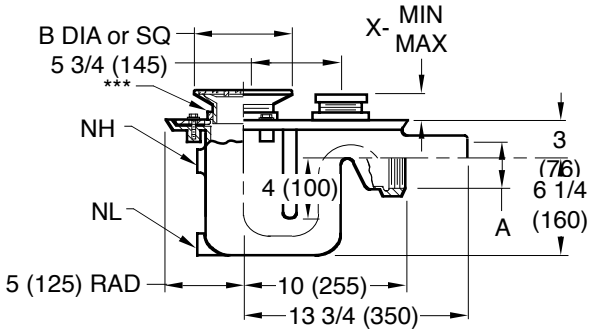

REGULARLY FURNISHED:
Duco Cast Iron Body and Flashing Collar, Adjustable Strainer Head, with Secured Grate. Type of Body and Strainer Head as Indicated by Figure Number and Strainer Suffix Letter Selected. **

SEE PM0457 FOR OPTIONAL STRAINER HEADS.

VARIATIONS:
- ☐ Ball Float Backwater Valve -BFV
- ☐ High Auxiliary Inlet -NH (1 1/2 (38) or 2" (51))
- ☐ Hinged Grate -H
- ☐ Low Auxiliary Inlet -NL (Fig. 2040 only)
- ☐ Sediment Bucket -B
- ☐ Trap Primer Connection -P050 (1/2" (13)) & -P075 (3/4" (19))
- ☐ Vandal Proof Screws -U

OPTIONAL MATERIALS:
- ☐ Bronze Body -BB
- ☐ Chrome Plated Strainer -CP
- ☐ Galvanized Cast Iron -G
- ☐ Nickel Bronze Strainer -NB
- ☐ Polished Bronze Strainer -PB

* Sized for service weight and/or NO-HUB.
** Not available for 5" (125) size strainer.
*** Collar can be used in high position only.

REV.	DATE	DESCRIPTION	BY	CKD. BY
G	3-21-95	Added Metric	EMB	BS
F	7-1-94	Revised	CMB	BS
E	9-23-93	Submittal Update	EMB	BS

WEIGHT POUNDS | VOLUME CUBIC FEET

FIGURE NUMBER
2020, 2021, 2030
2031, 2040, 2041

FIGURE NUMBER: 2020, 2021, 2030, 2031, 2040, 2041
DRAWN BY: PJ
CHECKED BY: TD
APPROVED BY: TD
DATE: 5-17-85
SCALE: NONE
SIZE: A
DRAWING NUMBER: S2020
G

DIMENSIONS ARE SUBJECT TO MANUFACTURERS TOLERANCE AND CHANGE WITHOUT NOTICE
WE CAN ASSUME NO RESPONSIBILITY FOR USE OF SUPERSEDED OR VOID DATA

WARNING: Cancer and Reproductive Harm - www.P65Warnings.ca.gov