K6190,1,2,3,4,5,6,7,8
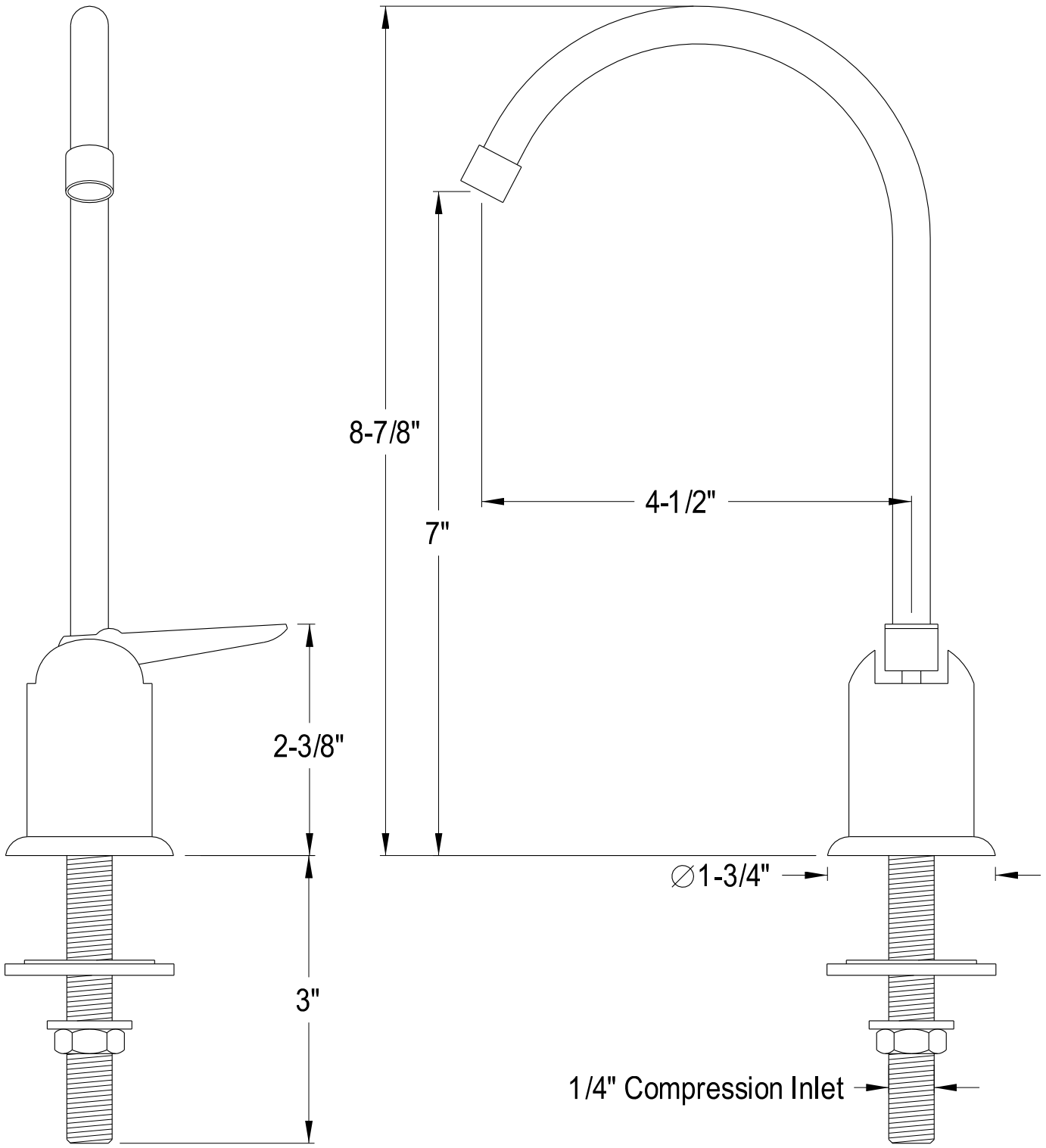
Single Handle Water Filtration Faucet