ADJUSTABLE SLAB SHOWER DRAIN

820 SERIES

ITEM # SUBMITTED_____

JOB NAME_____

LOCATION _____

ENGINEER_____

CONTRACTOR_____

PO#_____ TAG _____

SPECIFICATION

Sioux Chief 820 series adjustable slab shower drain shall be used where necessary in drainage systems. Strainer shall meet all load and flow requirements for installations in shower areas. Base adapter shall have a 2" Sch. 40 hub connection and connect to DWV pipe via solvent weld joint. Base adapter is designed to fit inside most 3" Sch. 40 PVC pipe. Designed for use in on-grade (only) tiled shower floors where a shower pan liner is not required.

Note: Not for use in above grade applications or where shower pan liner is installed

MATERIALS

Strainer: Plated/finished zamac
Head Adapter: Gray ABS
Base Adapter: Gray PVC

STRAINER LOAD RATING

500 lbs.

STRAINER FREE AREA

Round: 4.50 in^2
Square: 7.60 in^2

STRAINER FLOW CAPACITY

Round: 6.0 GPM
Square: 7.0 GPM

Observed flow rate under test conditions at 0.375" head.

DIMENSIONS

A:	Connection	2" Sch. 40 Hub*
C:	Base Height	2-5/8"
B:	Top Diameter	4-1/2"
D:	Overall Height	3-3/8" - 4-1/2"

* Fits inside 3" Sch. 40 PVC

820-20PKQ

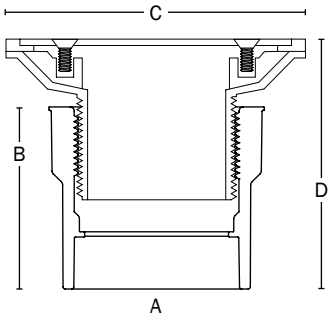

Create Item Number

820-ABC

e.g. 820-20PKQ: Adjustable slab shower pan drain with square, satin-nickel finish ring & strainer

TEST PLUG A
- ☐ No test plug (standard)
- ☐ **T** = DoubleDuty™ test plug included

RING/STRAINER FINISH B
- ☐ **20PC** = Chrome-plated
- ☐ **20PK** = Satin-nickel finish
- ☐ **20PRB** = Oil-rubbed bronze finish

RING/STRAINER PATTERN C
- ☐ **R** = Round ring & strainer
- ☐ **Q** = Square ring & strainer